THIS DRAWING IS UNPUBLISHED. RELEASED FOR PUBLICATION -,- .
© COPYRIGHT - By - ALL RIGHTS RESERVED.

LOC	DIST
H	—

REVISIONS

P	LTR	DESCRIPTION	DATE	DWN	APVD
	D	RELEASED PER ECR ECR-11-013217	21JUL11	RC	CW

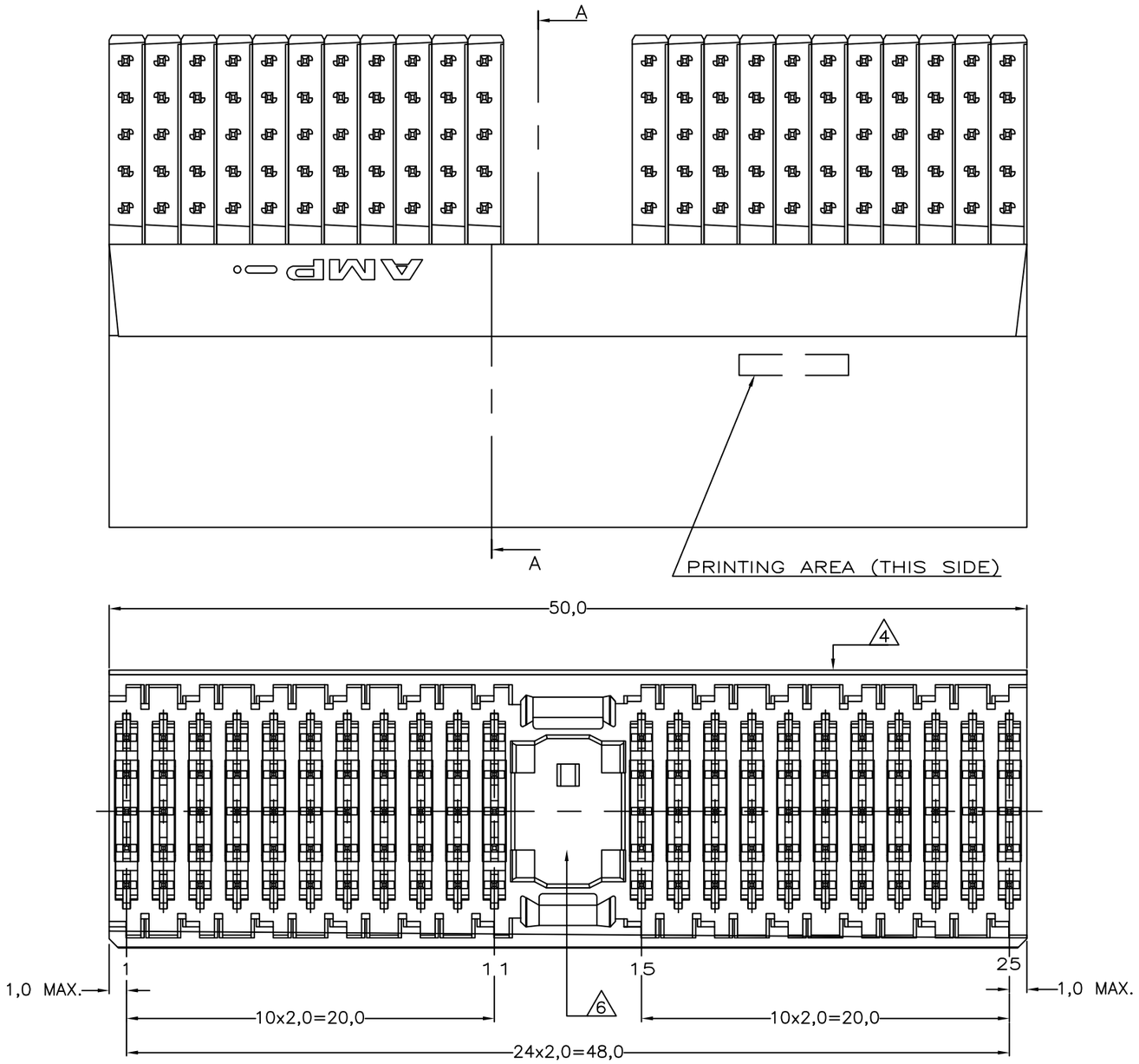

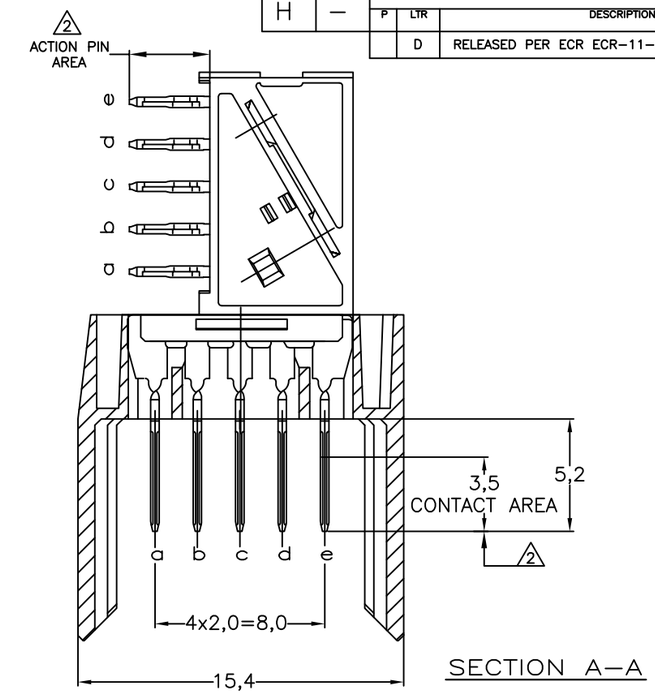

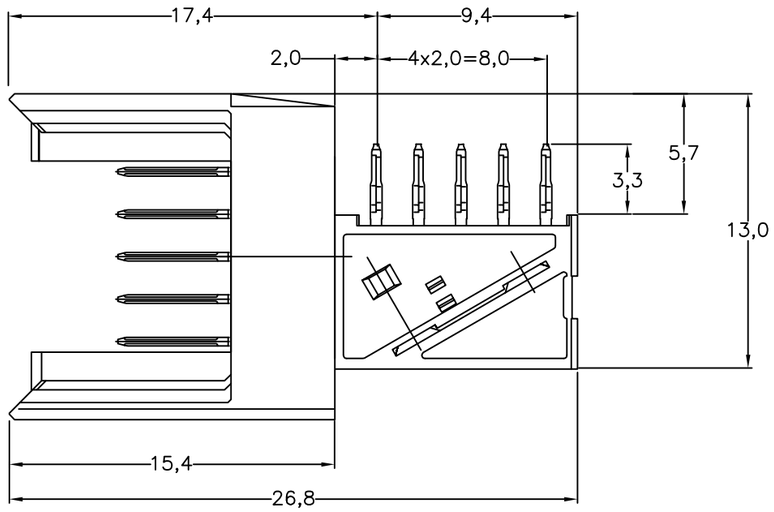

NOTES:

1. MATERIAL CONTACT; PHOSPHORBRONZE
   MATERIAL HOUSING; GLASSFILLED POLYESTER, UL94-V0 (GRAY)
2. GENERAL PLATING SPECIFICATION: UNDERPLATING (ENTIRE CONTACT): 1,27µm NICKEL MIN. AND ACTION PIN: 0,5µm TIN-LEAD MIN. FOR PLATING OF MATING SURFACES SEE APPLICABLE SPECIFICATION REFERENCE FOR EACH DASH NUMBER.
3. CONFORMS TO ALL TESTING ACCORDING IEC 61076-4-101 PERFORMANCE LEVEL 2.
4. CONNECTOR PRINTED WITH PARTNUMBER AND DATECODE
5. PLATED-THROUGH HOLES AT 2x2mm SQUARE GRID. 110 HOLES.
6. AREA RESERVED FOR KEYING PART (BASIC P.N. 100525)

SCALE 2,5:1

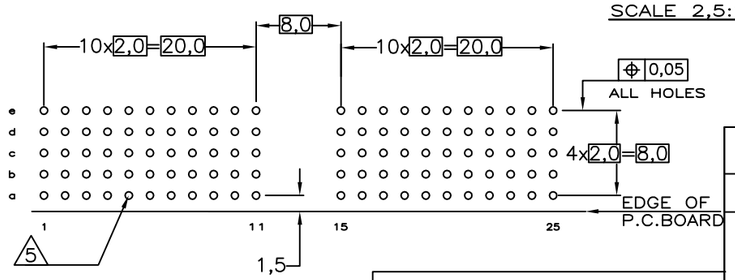

COMPONENT SIDE AS SHOWN
RECOMMENDED PCB-HOLE LAY-OUT

P.C.B. HOLE DIM. ACTION PIN
FOR DETAILS SEE
APPLICATION SPECIFICATION

THIS DRAWING IS A CONTROLLED DOCUMENT.

DIMENSIONS: mm

TOLERANCES UNLESS OTHERWISE SPECIFIED:
0 PLC ±
1 PLC ±
2 PLC ±
3 PLC ±
4 PLC ±
ANGLES ±
±0.2

MATERIAL -
FINISH -

2,3	1	188749-1
FINISH	MATERIAL	PARTNUMBER

DWN E. DERKS 16AUG95
CHK F.v.KONINGSBRUGGE 24AUG95
APVD —
PRODUCT SPEC —
APPLICATION SPEC 114-19029
WEIGHT —

TE Connectivity

NAME
Z-PACK 2MM HM TYPE A
110 POS. MALE EXTENDER CARD CONN.
WITH REVERSED FRONT HOUSING

SIZE	CAGE CODE	DRAWING NO	RESTRICTED TO
A2	00779	C-188749	—

CUSTOMER DRAWING | SCALE NTS | SHEET 1 OF 1 | REV D

188749

1471-9 (3/11)

Downloaded From Oneyac.com

单击下面可查看定价，库存，交付和生命周期等信息

>>TE Connectivity(泰科)

Downloaded From Oneyac.com