DRAWING MADE IN AMERICAN PROJECTION

NUMBER 421336

1970

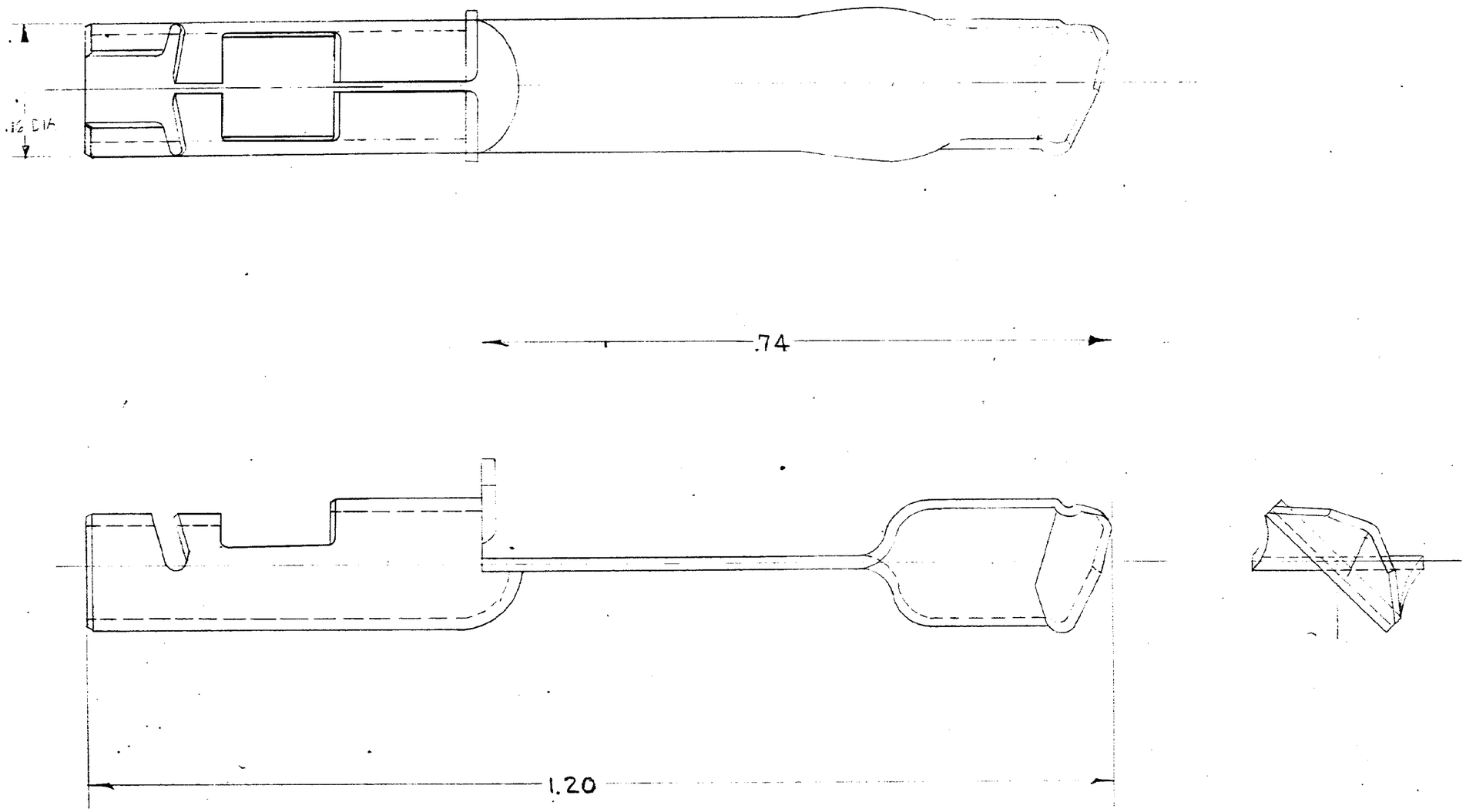

PART NO.	PLATING
421336-7	GOLD
421336-2	TIN

LTR	REVISION RECORD	ECN	DR CHK	DATE
A	-7 WAS -3			
D	RELEASE TO CUST			

REQUIRED PER ASSEMBLY

DESCRIPTION

DWG SIZE	NUMBER	NAME	REMARKS	ITEM NO
MATERIAL: FINE GRAIN BRASS	HEAT TREAT		COATING OR PLATING: SEE ABOVE	
WIRE RANGE / AREA	UNLESS OTHERWISE SPECIFIED: REMOVE BURRS, BREAK SHARP EDGES .015 R MAX; DECIMALS: .00 = ±.02, .000 = ±.005, .0000 = ±.0005; ANGLES: ±0° 30'			
CLASS	TYPE: LANCE LOK	AMP INCORPORATED HARRISBURG, PENNA		
DR: A.E. Zimmerman 9-4-70	FIRST USED			
CHK: Cliff Baker 9-4-70	P.F.P.	LOC S C	NO. 421336	REV A
APP: Leon Uzzi 9/4/70	SCALE 10:1	NAME SPRING-LEFT HAND		
REL				

CUSTOMER DRAWING

DIMENSIONS IN INCHES. DO NOT SCALE PRINT.

PRINT DATA 12 14

AMP 1256 REV 9/66

Downloaded From Oneyac.com

单击下面可查看定价，库存，交付和生命周期等信息

>>TE Connectivity(泰科)

Downloaded From Oneyac.com