THIS DRAWING IS UNPUBLISHED. RELEASED FOR PUBLICATION 19
© COPYRIGHT 20 BY TYCO ELECTRONICS CORPORATION. ALL RIGHTS RESERVED.

LOC	DIST
AD	00

REVISIONS

P	LTR	DESCRIPTION	DATE	DWN	APVD
	B3	ECO-06-22964	28SEP2006	MB	DR

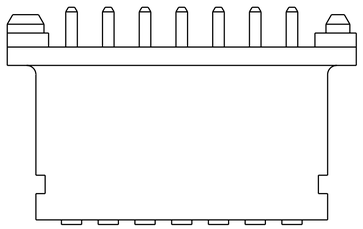

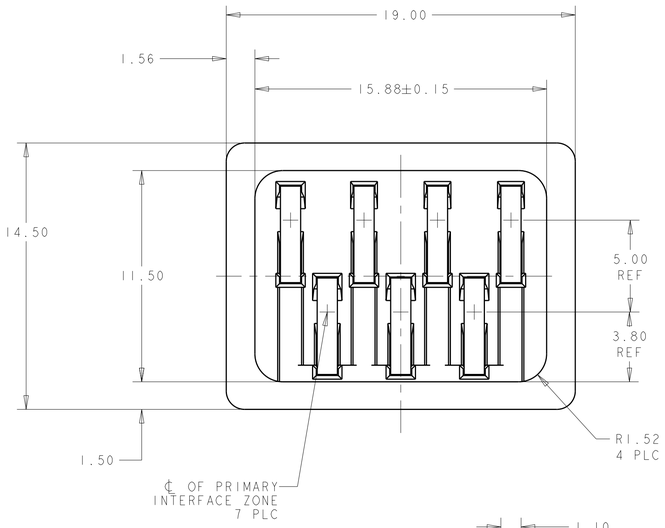

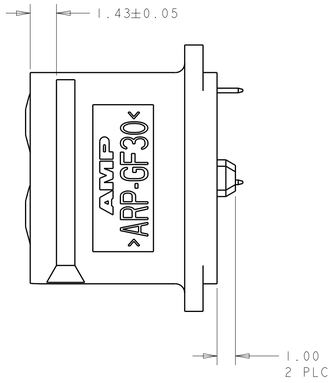

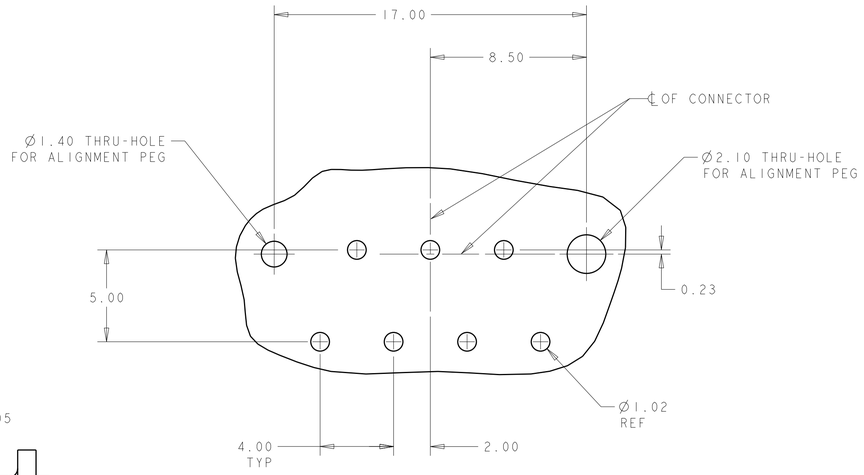

RECOMMENDED BOARD LAYOUT

1. HOUSING MATERIAL: LIQUID CRYSTAL POLYMER,
   COLOR: BLACK
2. HOUSING MATERIAL: LIQUID CRYSTAL POLYMER,
   COLOR: NATURAL
3. CONTACTS: PHOSPHOR BRONZE
   PLATING: 0.76µm MIN GOLD ON CONTACT AREA
   3.0µm MIN TIN-LEAD ON SOLDER LEADS OVER
   0.76µm MIN NICKEL UNDERPLATE OVERALL
4. CONTACTS: PHOSPHOR BRONZE
   PLATING: 0.26µm MIN HARD GOLD FLASH OVER
   1.3µm MIN PALLADIUM NICKEL ON CONTACT AREA
   3.0µm MIN TIN-LEAD ON SOLDER LEADS OVER
   0.76µm MIN NICKEL UNDERPLATE OVERALL
5. 1375936-2 & 5-1375936-2 ARE FOR TESTING PUPOSES ONLY
6. CONTACTS: PHOSPHOR BRONZE
   PLATING: 0.76µm MIN GOLD ON CONTACT AREA,
   3.0µm MIN TIN ON SOLDER LEADS OVER
   0.76µm MIN NICKEL UNDERPLATE OVERALL
7. CONTACTS: PHOSPHOR BRONZE
   PLATING: 0.26µm MIN HARD GOLD FLASH OVER
   1.3µm MIN PALLADIUM NICKEL ON CONTACT AREA
   3.0µm MIN TIN ON SOLDER LEADS OVER
   0.76µm MIN NICKEL UNDERPLATE OVERALL
8. ROHS 2002/95/EC COMPLIANT

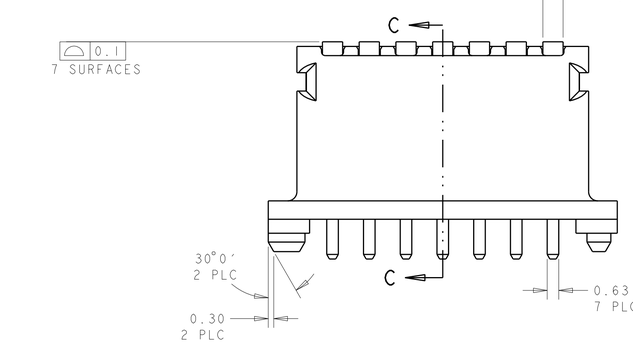

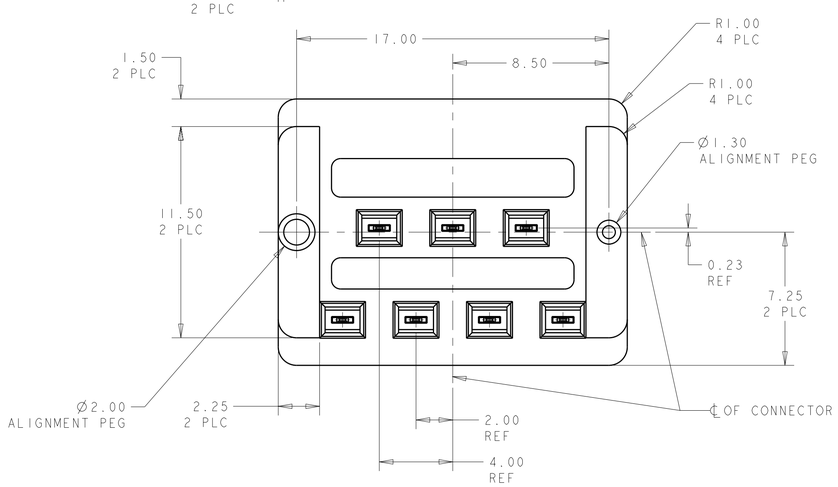

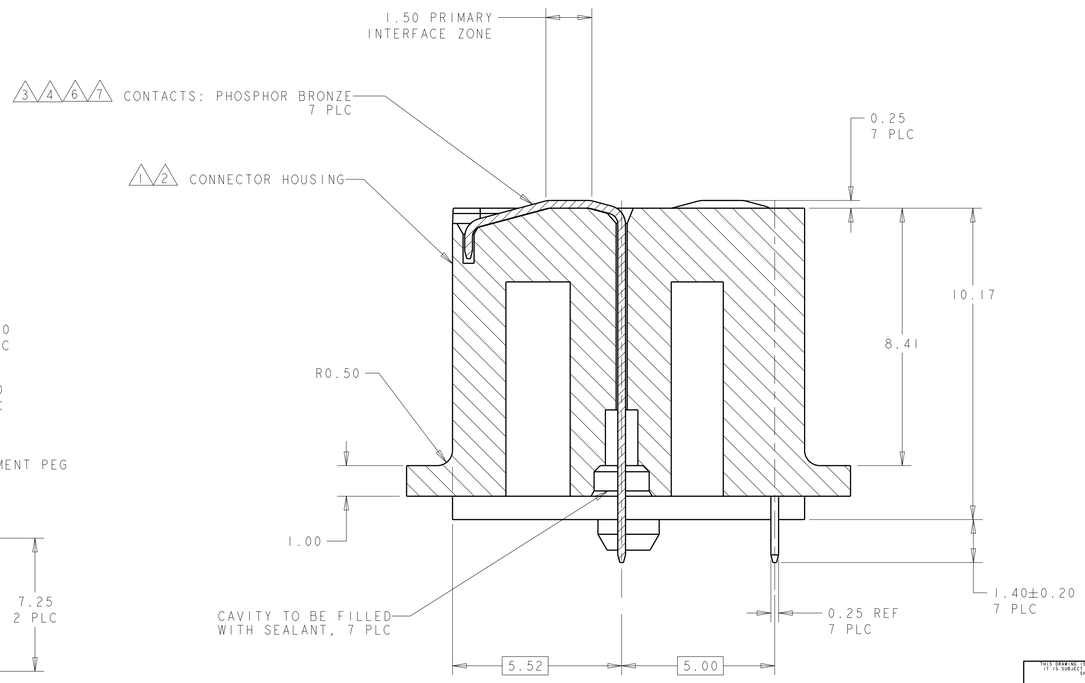

SECTION C-C
SCALE 10:1

2 5 7 8	5-1375936-2
6 1 8	5-1375936-1
2 4 5	1375936-2
1 3	1375936-1
	PART NUMBER

THIS DRAWING IS A CONTROLLED DOCUMENT FOR TYCO ELECTRONICS CORPORATION. IT IS SUBJECT TO CHANGE AND THE CONTROLLING ENGINEERING ORGANIZATION SHOULD BE CONTACTED FOR THE LATEST REVISION.

DIMENSIONS: mm

TOLERANCES UNLESS OTHERWISE SPECIFIED:
0 PLC ±-
1 PLC ±-
2 PLC ±0.13
3 PLC ±-
4 PLC ±-
ANGLES ±1°0′

MATERIAL - -
FINISH - -

DWN J MOSER 17JUL00
CHK J LANDIS 17JUL00
APVD -
PRODUCT SPEC -
APPLICATION SPEC -
WEIGHT -

AMP
Tyco Electronics
Harrisburg, PA 17105-3608

NAME ASSEMBLY, CONNECTOR, HEADER, THERMOMETER CONNECTOR

SIZE	CAGE CODE	DRAWING NO	RESTRICTED TO
A1	00779	C-1375936	-

CUSTOMER DRAWING | SCALE 6:1 | SHEET 1 OF 1 | REV B3

AMP 4805 REV 31MAR2000

Pro/ENGINEER DRAWING

Downloaded From: Oneyac.com

单击下面可查看定价，库存，交付和生命周期等信息

>>TE Connectivity(泰科)

Downloaded From Oneyac.com