THIS DRAWING IS UNPUBLISHED. RELEASED FOR PUBLICATION -,- .
© COPYRIGHT - TE Connectivity Ltd. ALL RIGHTS RESERVED.

REVISIONS

P	LTR	DESCRIPTION	DATE	DWN	APVD
	E	REV PER ECO 19-002303	4-15-19	CT	DM

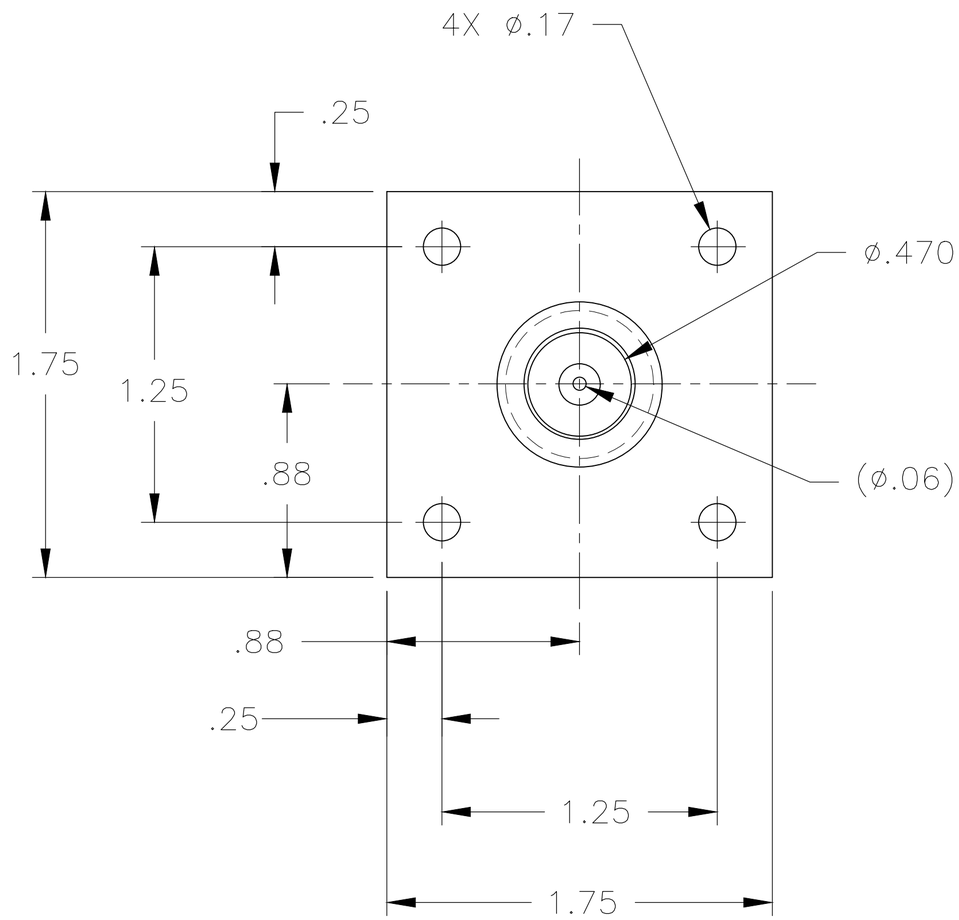

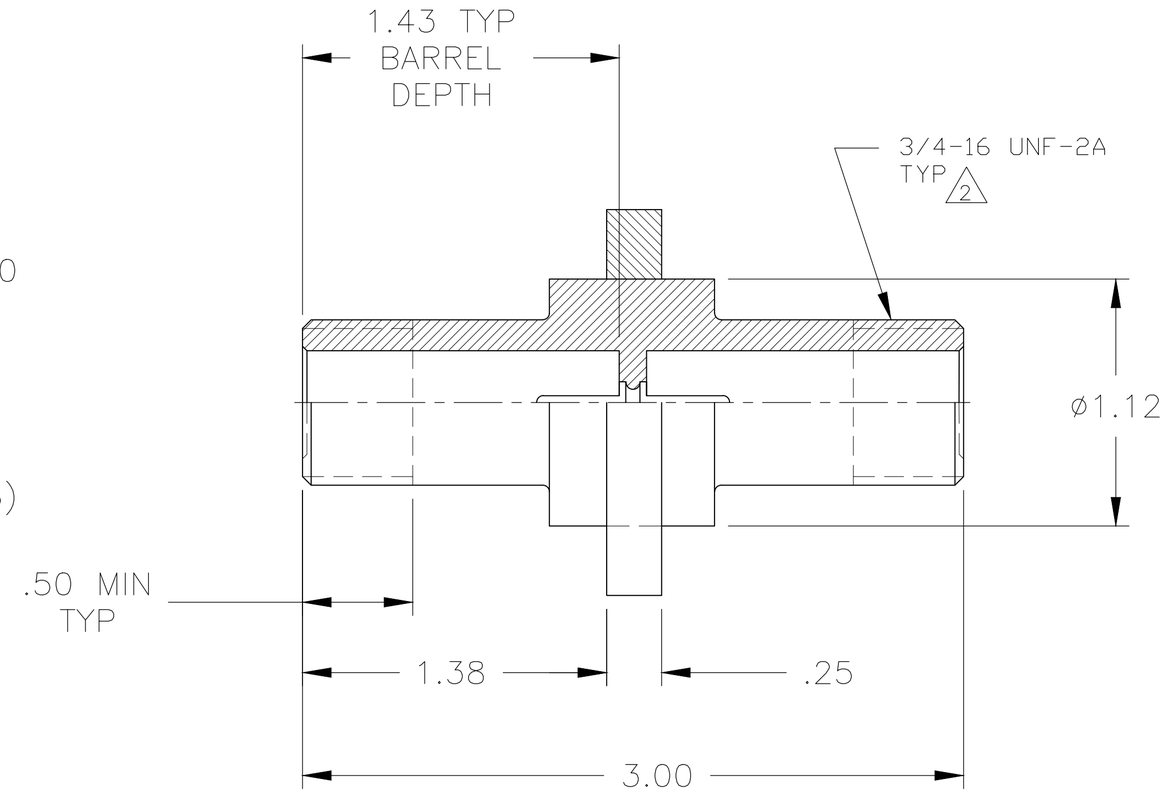

OBSOLETE	PIN - GOLD PLATED	850735-2
	PIN - TIN PLATED	850735-1
	DESCRIPTION	PART NO.

1. RECEPTACLE TO MATE WITH AMP LGH-2 LEAD ASSEMBLY. AVAIABLE SEPARATELY.
2. PER FEDERAL STANDARD H-28 3 WIRE METHOD. DIMENSION OVER WIRES TO BE: .7474-.7654.

THIS DRAWING IS A CONTROLLED DOCUMENT.

DIMENSIONS: INCHES

TOLERANCES UNLESS OTHERWISE SPECIFIED:
0 PLC ± -
1 PLC ± -
2 PLC ± .03
3 PLC ± .015
4 PLC ± -
ANGLES ± -

MATERIAL: GLASS EPOXY
FINISH: -

DWN C.C.THOMAS 4-15-19
CHK D.MILLER 4-15-19
APVD D.MILLER 4-15-19
PRODUCT SPEC —
APPLICATION SPEC —
WEIGHT 0

TE Connectivity Ltd.

NAME: RECEPTACLE. ,FEED-THRU, LGH-2
—
—

SIZE	CAGE CODE	DRAWING NO	RESTRICTED TO
A2	00779	C-850735	—

CUSTOMER DRAWING | SCALE 4:1 | SHEET 1 OF 1 | REV E

850735

1471-9 (1/15)

Downloaded From Oneyac.com

单击下面可查看定价，库存，交付和生命周期等信息

>>TE Connectivity(泰科)

Downloaded From Oneyac.com