THIS DRAWING IS UNPUBLISHED. RELEASED FOR PUBLICATION -,- .
© COPYRIGHT - By - ALL RIGHTS RESERVED.

REVISIONS

P	LTR	DESCRIPTION	DATE	DWN	APVD
	H1	REVISED PER ECO-11-004917	11MAR11	RK	HMR
	H2	REVISED PER ECO-17-014333	14OCT2017	RS	DR

AMP
WIRE RANGE
4 AWG
STRANDED

1 BODY MATERIAL THK 1.219±0.051[.048±.002]

2 FOR ø9.702[ø.382] MAX WIRE INS.

3 STAMP AMP 4* APPROX AS SHOWN.

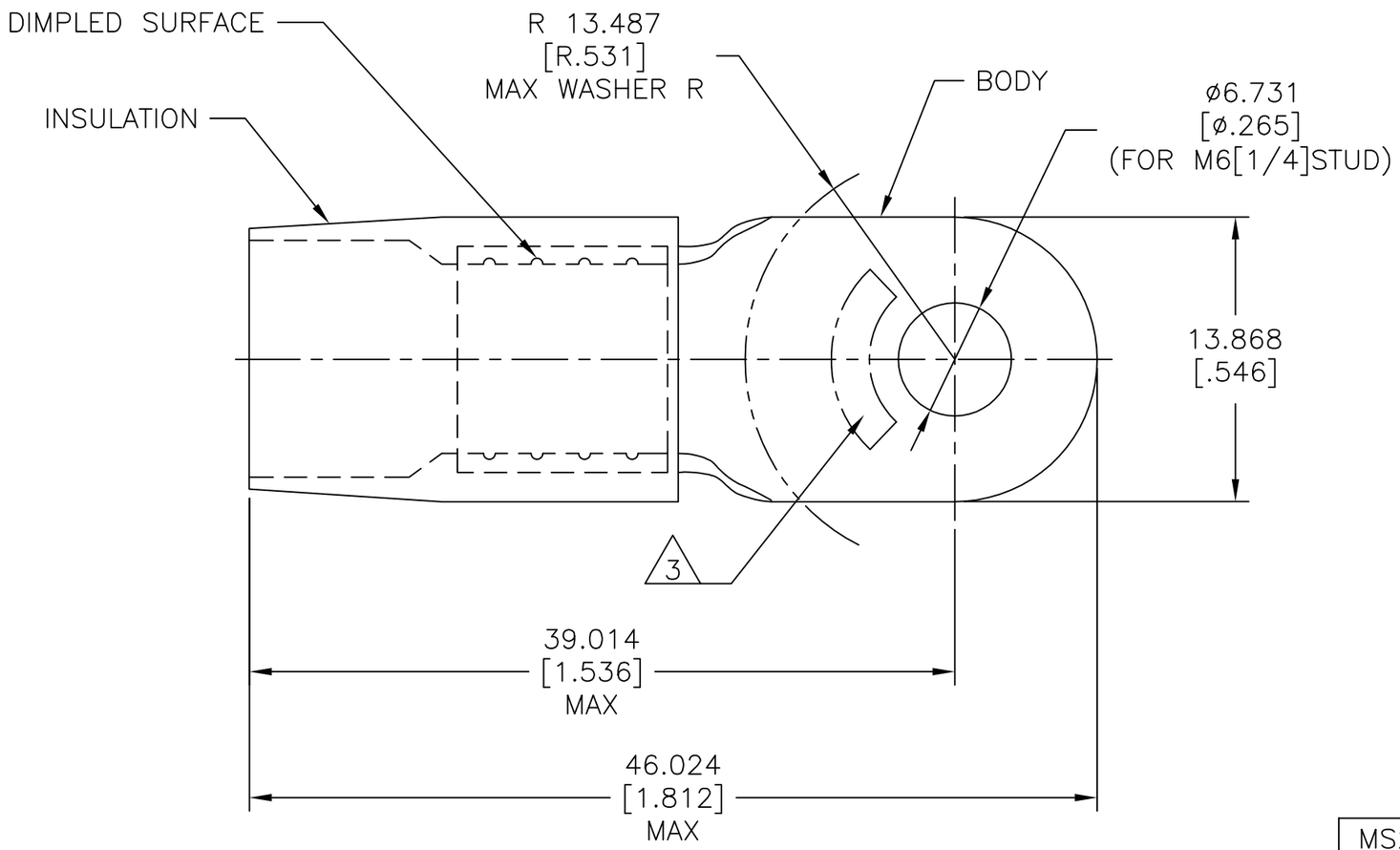

MS25036-123 CLASS 2	100	LOOSE PC	324050
MILITARY P/N AND CLASS	QTY	PACKAGE TYPE	PART NO

AMP INCORPORATED
CUSTOMER SERVICE SYSTEMS

FOR ADDITIONAL PRODUCT INFORMATION OR COPIES OF DRAWINGS AND TECHNICAL DOCUMENTS	PRODUCT INFORMATION CENTER 1-800-522-6752
FOR APPLICATION TOOLING INFORMATION	TOOLING ASSISTANCE CENTER 1-800-722-1111
FOR ORDER ENTRY	1-800-526-5142

THIS DRAWING IS A CONTROLLED DOCUMENT FOR AMP INCORPORATED. IT IS SUBJECT TO CHANGE AND THE CONTROLLING ENGINEERING ORGANIZATION SHOULD BE CONTACTED FOR THE LATEST REVISION.

MAX RECOMMENDED OPERATING TEMPERATURE: 105°C[221°F]

VOLTAGE RATING: -

CIRCULAR MIL AREA: 16.8-26.7mm²[33,100-52,600] STRANDED

THIS DRAWING IS A CONTROLLED DOCUMENT.

DIMENSIONS: mm [INCHES]

TOLERANCES UNLESS OTHERWISE SPECIFIED:
0 PLC ± -
1 PLC ± -
2 PLC ± -
3 PLC ± 0.127[.005]
4 PLC ± -
ANGLES ± -

MATERIAL: BODY: COPPER PER ASRM B-152 INSULATION: NYLON ASTM D4066 TYPE I

FINISH: BODY: TIN PLATE PER ASTM B545 INSULATION: COLOR-YELLOW

DWN S.S. GOULDEN 6-18-93
CHK R. HERSEY 6-18-93
APVD B. BARE 6-18-93
PRODUCT SPEC SAE AS7928
APPLICATION SPEC —
WEIGHT —

TE Connectivity

NAME: TERMINAL, RING TONGUE, TERMINYL
WIRE SIZE: 4 AWG

SIZE	CAGE CODE	DRAWING NO	RESTRICTED TO
A3	00779	C-324050	—

CUSTOMER DRAWING | SCALE NTS | SHEET 1 OF 1 | REV H2

1470-19 (1/15)

Downloaded From Oneyac.com

单击下面可查看定价，库存，交付和生命周期等信息

>>TE Connectivity(泰科)

Downloaded From Oneyac.com