THIS DRAWING IS UNPUBLISHED. RELEASED FOR PUBLICATION -.- .
© COPYRIGHT - BY TYCO ELECTRONICS CORPORATION. ALL INTERNATIONAL RIGHTS RESERVED.

| LOC | DIST |
|---|---|
| F | 00 |

REVISIONS

| P | LTR | DESCRIPTION | DATE | DWN | APVD |
|---|---|---|---|---|---|
| | A | AJOUT N° SPEC | 11/91 | F.J | – |
| | B | REVISE | 02/92 | F.J | – |
| | C | MODIFIE | 05/92 | F.J | – |
| | D | MIS A JOUR | 09/92 | F.J | – |
| | E | MIS A JOUR | 10/12/08 | NT.N | J.L |
| | F | SUPPRESSION COULEUR NATUREL | 09/02/09 | CS | JPP |

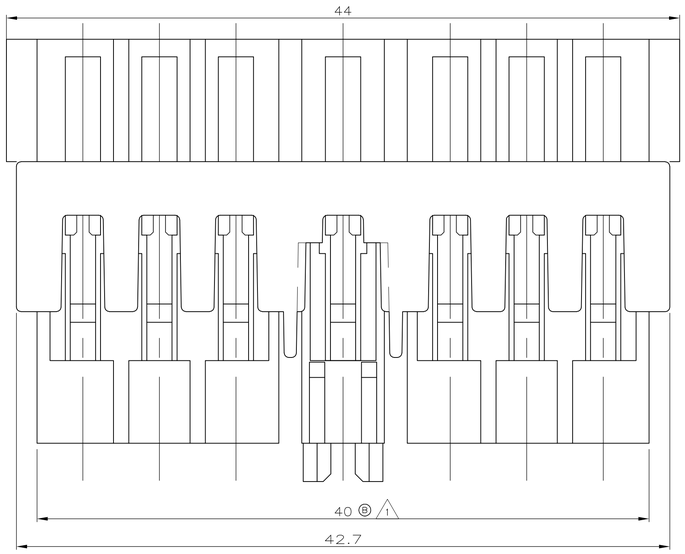


| | |
|---|---|
| A = 6.2±0.1 | |
| B = 6.2±0.1 | |
| C = 4 | |
| D = 4 | |

COUPE BB

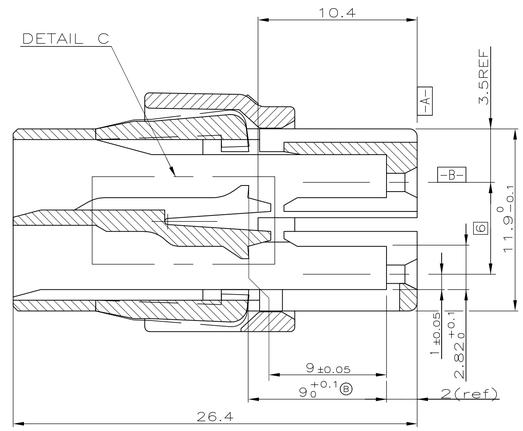


DETAIL C
(ECHELLE=8)

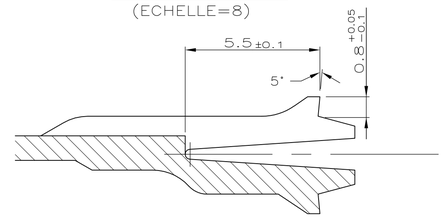


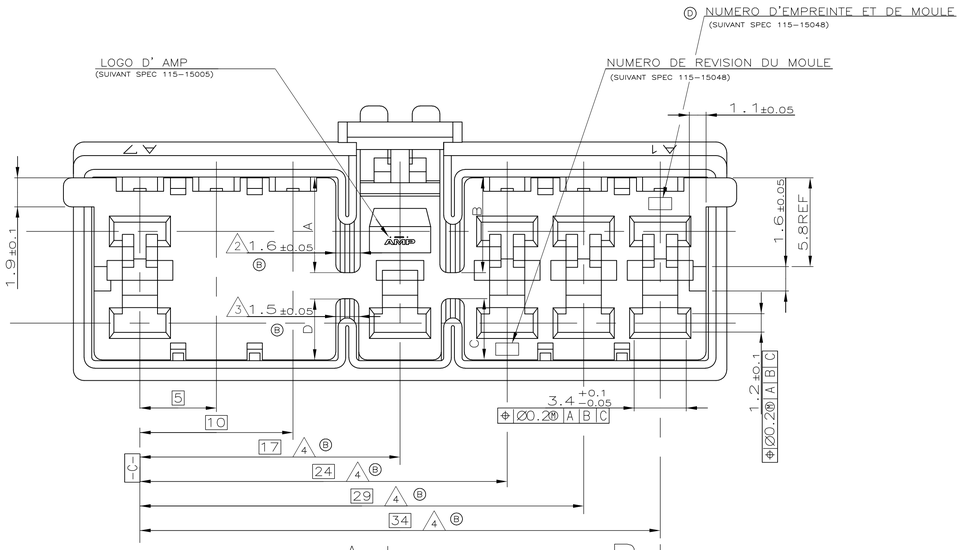


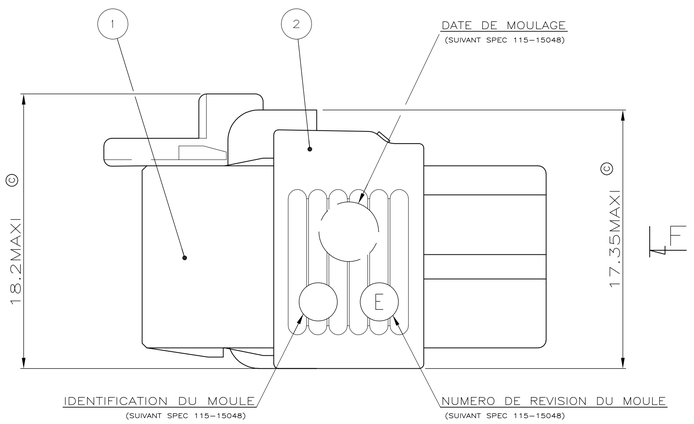


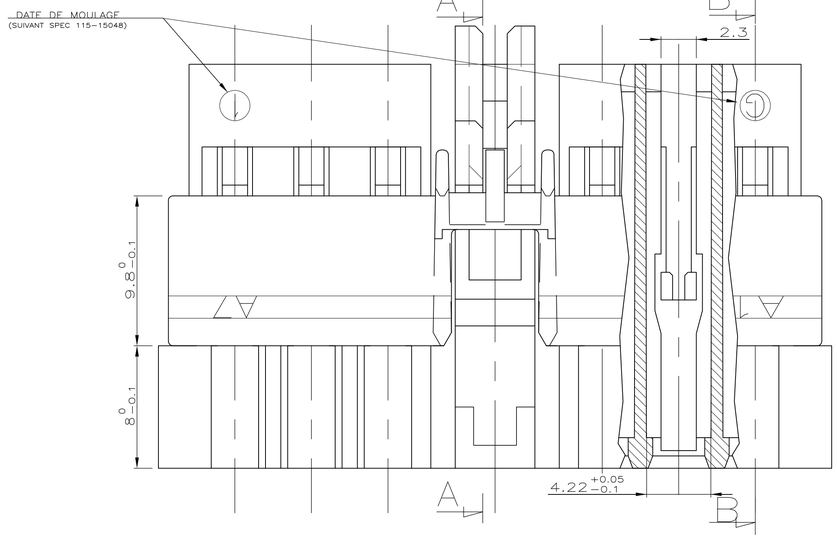


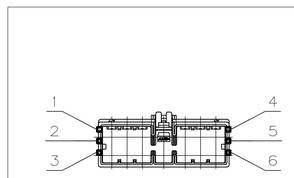


VUE F
Echelle 1

| | | |
|---|---|---|
| 5-C144320-5 | ROUGE | |
| 144320-9 | JAUNE | 4-3 |
| 144320-8 | ORANGE | 3-5 |
| 144320-7 | BLEU | 3-6 |
| 144320-6 | VERT | 1-6 |
| 144320-5 | ROUGE | 2-6 |
| 144320-4 | GRIS | 1-5 |
| 144320-3 | MARRON | 2-4 |
| 144320-2 | NOIR | 2-5 |
| 144320-1 | BLANC | 1-4 |
| REFERENCE | COULEUR | DETROMPAGE |

COUPE AA

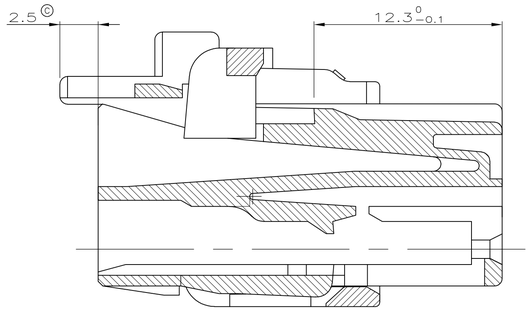


△1 PINCEMENT ADMIS SUR FACE -A- 0.2 MAX
△2 PINCEMENT ADMIS 0.15 MAX
△3 PINCEMENT ADMIS 0.1 MAX
△4 PINCEMENT TOTAL ADMIS 0.4 MAX

- SPEC PRODUIT : 108-15072
- SPEC CONDITIONNEMENT : 107-15131

| | | |
|---|---|---|
| JUPE DE VERROUILLAGE | Matiere: ZAMAK 5 | 2 |
| BOITIER P.C.13V.MIC4 A DBLE VERROU. | Matiere: PA 6/6 20% FV | 1 |
| DESCRIPTION | DESIGNATION | REP. |

THIS DRAWING IS A CONTROLLED DOCUMENT.

DIMENSIONS: mm

TOLERANCES UNLESS OTHERWISE SPECIFIED:
0 PLC ± -
1 PLC ± -
2 PLC ± 0.2
3 PLC ± -
4 PLC ± -
ANGLES ± 2°

MATERIAL -
FINISH -

DWN F.JODON 13/09/91
CHK -
APVD -
PRODUCT SPEC -
APPLICATION SPEC -
WEIGHT -

Tyco Electronics
Tyco Electronics Corporation
Pontoise, 95300 FRANCE

NAME -
13 POSN,MIC4,DOUBLE LOCKING PLUG HOUSING ASSY
BOITIER PC MIC4 ASS'Y,13 POS.,A DOUBLE VERROUIL.

| SIZE | CAGE CODE | DRAWING NO | RESTRICTED TO |
|---|---|---|---|
| A1 | 00779 | C-144320 | - |

CUSTOMER DRAWING | SCALE 5:1 | SHEET 1 OF 1 | REV F


Downloaded From Oneyac.com

单击下面可查看定价，库存，交付和生命周期等信息

>>TE Connectivity(泰科)

Downloaded From Oneyac.com