THIS DRAWING IS UNPUBLISHED. RELEASED FOR PUBLICATION ,19 .
© COPYRIGHT 19 BY AMP INCORPORATED. ALL RIGHTS RESERVED.

LOC	DIST
ES	00

REVISIONS

P	LTR	DESCRIPTION	DATE	DWN	APVD
	B1	REVISED ECR-07-028230	26NOV07	A.L	S.Y

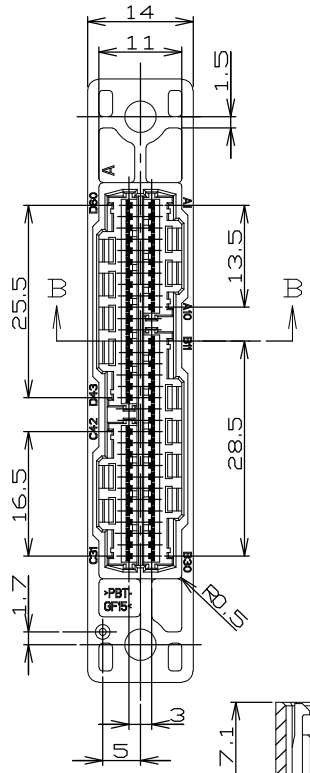

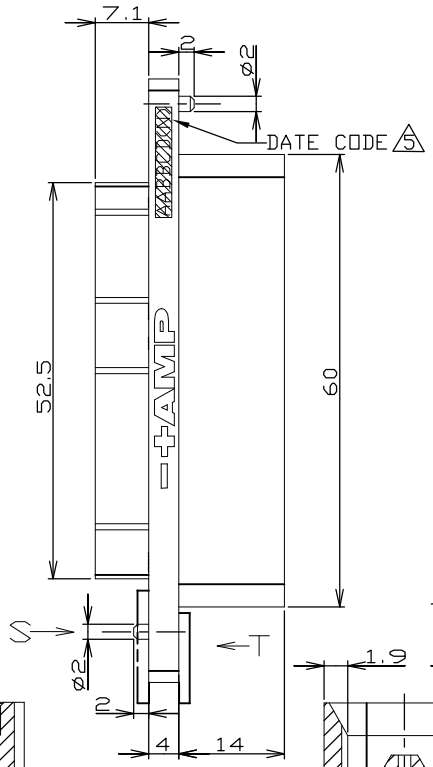

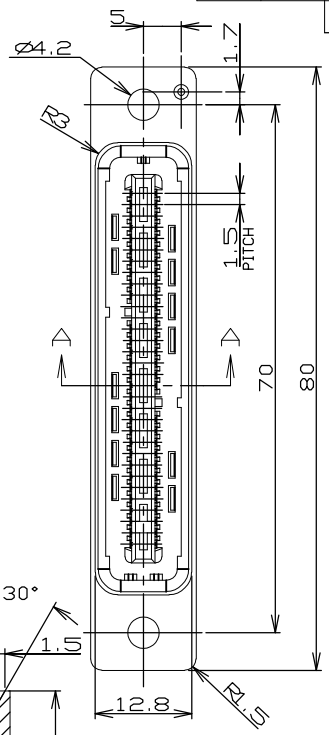

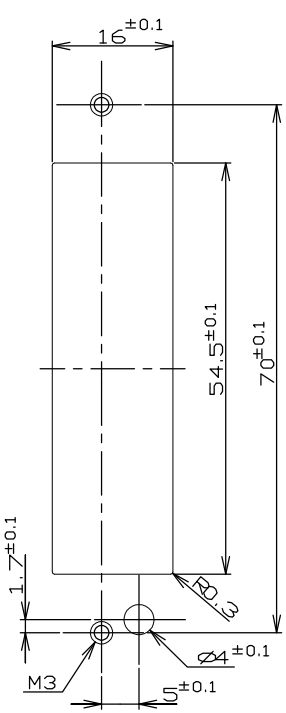

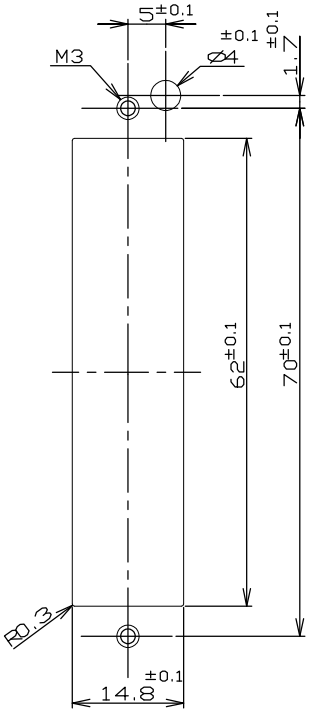

VIEW S PANEL CUT DIMENSIONS (CONNECTOR MATING SIDE) VIEW T

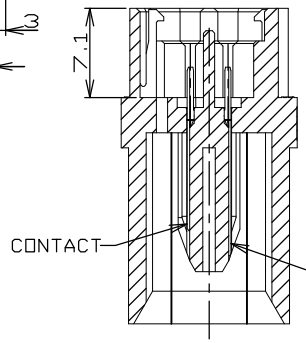

SECT B-B

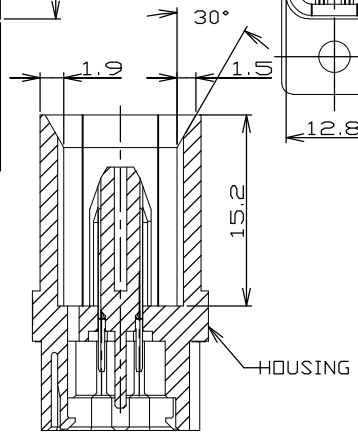

SECT A-A

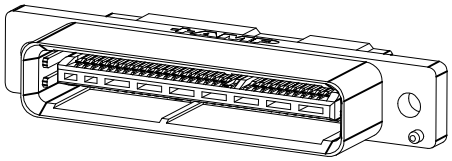

6-292233-0 AS SHOWN

B1 NOTES:
1. USE WITH MT REC CONN P/N: X-353293-X
CRIMP HSG P/N: X-353908-X
CRIMP CONT P/N: 353907-1
353918-1(L/P)

2 MATERIAL:
HOUSING: PBT G.F. UL94V-0 COLOR: BLACK
CONTACT: BRASS

3 FINISH:
CONTACT: NICKEL UNDERPLATE ALL OVER
CONTACT AREA: GOLD PLATE.
POST AREA: MATTE TIN PLATE.

4 SEQUENTIAL CONTACT LOCATION: B11

5 LOCATION OF DATE CODE (PRINTED BY HOT-BAR): AABBCD(N)
(AA: YEAR, BB: WEEK, C: DAY OF WEEK, D: DAYTIME, N: NIGHT)

TOLERANCES UNLESS OTHERWISE SPECIFIED:

10>	: ±0.2
30> * >10	: ±0.25
100> * >30	: ±0.3
ANGLE	: ±3°

AMP 1470-19 REV 09MAY94

THIS DRAWING IS A CONTROLLED DOCUMENT FOR AMP INCORPORATED. IT IS SUBJECT TO CHANGE AND THE CONTROLLING ENGINEERING ORGANIZATION SHOULD BE CONTACTED FOR THE LATEST REVISION.

DIMENSIONS: mm

TOLERANCES UNLESS OTHERWISE SPECIFIED:

0 PLC	±
1 PLC	±0.1
2 PLC	±0.01
3 PLC	±0.001
4 PLC	±0.0001
ANGLES	±

MATERIAL 2 FINISH 3

DWN S.YAO	13DEC02	
CHK S.YAO	13DEC02	
APVD T.SASAKI	31DEC02	
PRODUCT SPEC		
APPLICATION SPEC		
WEIGHT	16.7 g	

CUSTOMER DRAWING

Tyco Electronics

Tyco Electronics Corporation
Shanghai, China 200233

NAME: PLUG ASS'Y for DC TYPE 60Pos. 1.5mm PITCH MINI CT DRAWER CONNECTOR

SIZE	CAGE CODE	DRAWING NO
A3	00779	C-292233

SCALE 3:2 SHEET 1 OF 1 REV B1

Downloaded From Oneyac.com

单击下面可查看定价，库存，交付和生命周期等信息

>>TE Connectivity(泰科)

Downloaded From Oneyac.com