THIS DRAWING IS UNPUBLISHED. RELEASED FOR PUBLICATION -,- .
© COPYRIGHT - By - ALL RIGHTS RESERVED.

LOC	DIST
AF	50

REVISIONS

P	LTR	DESCRIPTION	DATE	DWN	APVD
	M2	REVISED PER ECR-12-013219	08JAN13	KH	KR

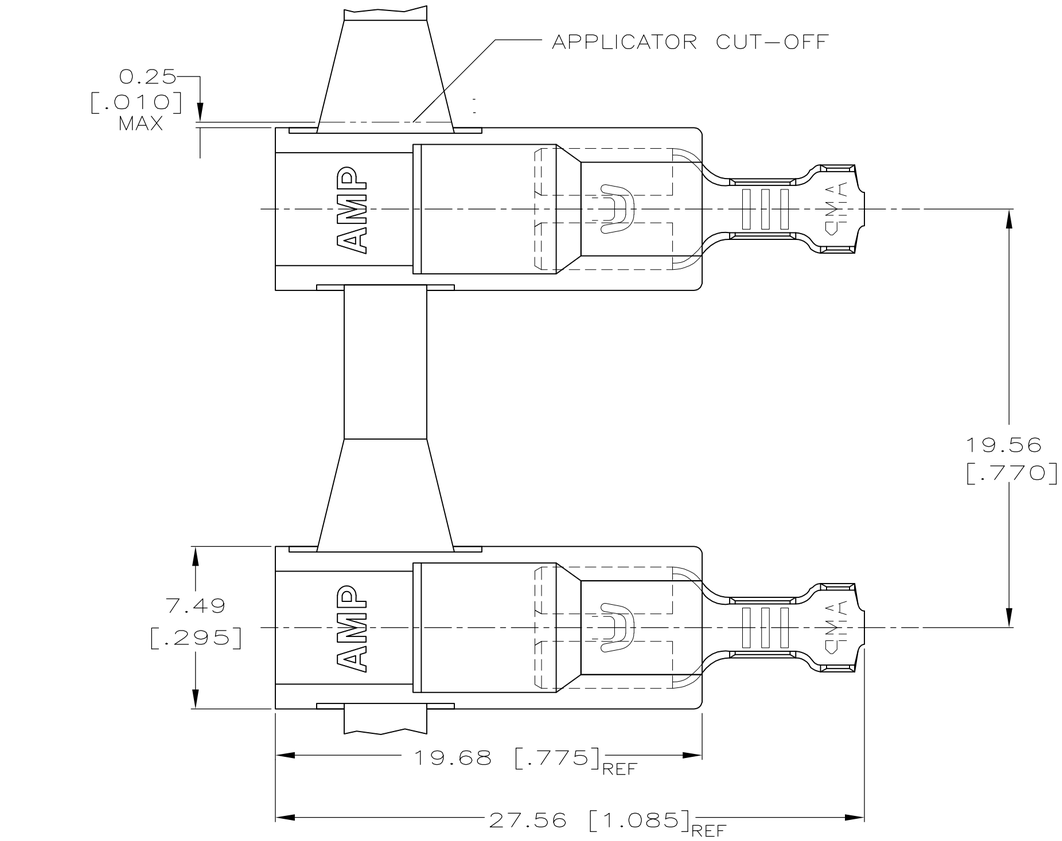

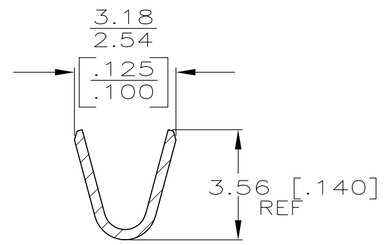

SECTION A–A

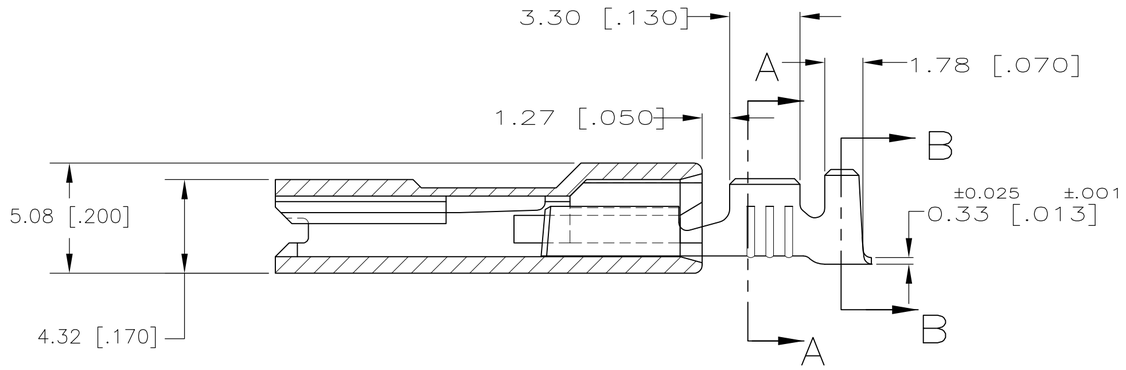

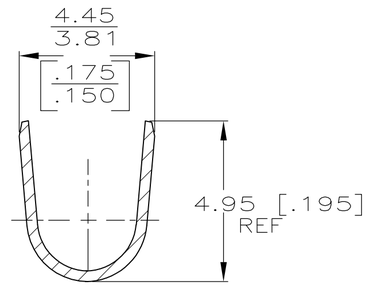

SECTION B–B

1 FASTON TERMINALS, BASE P/N 63653, ARE USED IN THIS PRODUCT.

2 TIN PLATE PER MIL-T-10727 .002032 [.000080] MIN.

3 MATERIAL: HOUSING – 6/6 NYLON
TERMINAL – BRASS

4 FINISH: HOUSING – COLOR, NATURAL
TERMINAL – SEE TABLE

	PACKAGING	TERMINAL FINISH	INSULATION RANGE	WIRE SIZE	MATING TAB THK ±0.025 [±.001]	PART NO.
OBSOLETE	~~BULK~~	~~TIN 2~~	2.29–3.30 [.090–.130] DIA	0.5–1.3 mm² [20–16]	0.508 [.020]	~~5-520973-2~~
OBSOLETE	~~BULK~~	~~PLAIN~~				~~5-520973-1~~
	STANDARD	TIN 2				520973-2
	STANDARD	PLAIN				520973-1

THIS DRAWING IS A CONTROLLED DOCUMENT.

DIMENSIONS: mm [INCHES]

TOLERANCES UNLESS OTHERWISE SPECIFIED:
0 PLC ± –
1 PLC ± –
2 PLC ± –
3 PLC ± 0.25 [.010]
4 PLC ± –
ANGLES ± –

MATERIAL 3

FINISH 4

DWN	JR RUTH	3/20/90
CHK	MS FEHER	3/20/90
APVD	R KUZO	3/20/90
PRODUCT SPEC	108-1285	
APPLICATION SPEC	114-2124	
WEIGHT	–	

TE Connectivity

NAME: ASSEMBLY, RECEPTACLE, ULTRA-POD, 4.8 [.187] SERIES

SIZE	CAGE CODE	DRAWING NO	RESTRICTED TO
A2	00779	C-520973	–

CUSTOMER DRAWING | SCALE 5:1 | SHEET 1 OF 1 | REV M2

520973

1471-9 (3/11)

Downloaded From Oneyac.com

单击下面可查看定价，库存，交付和生命周期等信息

>>TE Connectivity(泰科)

Downloaded From Oneyac.com