THIS DRAWING IS UNPUBLISHED. RELEASED FOR PUBLICATION ,19 .
© COPYRIGHT 19 BY AMP INCORPORATED. ALL RIGHTS RESERVED.

LOC	DIST
G	14

REVISIONS

P	LTR	DESCRIPTION	DATE	DWN	APVD
	D	REV / OL20-0040-96	06JAN97	ME	TM

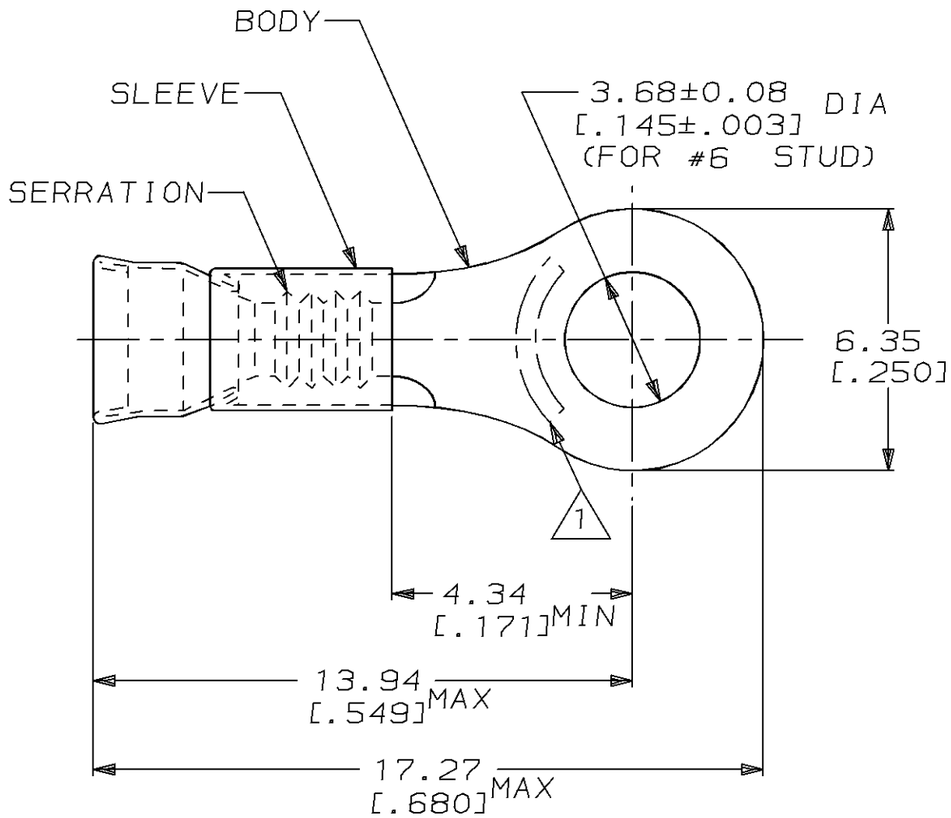

1 STAMP AMP 16-14* APPROX AS SHOWN

2. WIRE INSUL DIA, 2.03-3.30 [.080-.130]

3. TONGUE MATL THK, 0.79±0.05 [.031±.002]

QTY	PACKAGE TYPE	PART NO
1000	LOOSE PIECE	323158

AMP INCORPORATED
CUSTOMER SERVICE SYSTEM

FOR ADDITIONAL PRODUCT INFORMATION OR COPIES OF DRAWINGS AND TECHNICAL DOCUMENTS	PRODUCT INFORMATION CENTER 1-800-522-6752
FOR APPLICATION TOOLING INFORMATION	TOOLING ASSISTANCE CENTER 1-800-722-1111
FOR ORDER ENTRY	1-800-526-5142

MAX RECOMMENDED OPERATING TEMPERATURE: 343°C [650°F]

VOLTAGE RATING: - -

CIRCULAR MIL AREA: 1.04mm²-2.62mm² [2050-5180]

STRANDED WIRE

THIS DRAWING IS A CONTROLLED DOCUMENT FOR AMP INCORPORATED. IT IS SUBJECT TO CHANGE AND THE CONTROLLING ENGINEERING ORGANIZATION SHOULD BE CONTACTED FOR THE LATEST REVISION.

DIMENSIONS: mm [in]

TOLERANCES UNLESS OTHERWISE SPECIFIED,

0 PLC	±-
1 PLC	±-
2 PLC	±0.20 [.008]
3 PLC	±-
4 PLC	±-
ANGLES	±-

MATERIAL: BODY, CU PER ASTM B152; SLEEVE, NI SIL PER ASTM B122

FINISH: BODY, NP, QQ-N-290

DWN	L OLMEDA	100CT94
CHK	M ELLIS	100CT94
APVD	S BORTNER	100CT94
PRODUCT SPEC	–	
APPLICATION SPEC	–	
WEIGHT	–	

AMP Incorporated
Harrisburg, PA 17105-3608

NAME: TERMINAL, RING TONGUE, STRATO-THERM™, DIAMOND GRIP™ WIRE SIZE, 16-14 AWG

SIZE	CAGE CODE	DRAWING NO
A3	00779	C-323158

CUSTOMER DRAWING

SCALE	SHEET	REV
6:1	1 OF 1	D

AMP 1470-19 REV 09MAY94

Downloaded From Oneyac.com

单击下面可查看定价，库存，交付和生命周期等信息

>>TE Connectivity(泰科)

Downloaded From Oneyac.com