THIS DRAWING IS UNPUBLISHED. RELEASED FOR PUBLICATION ,19 .
© COPYRIGHT 19 BY AMP INCORPORATED. ALL RIGHTS RESERVED.

LOC	DIST
G	14

REVISIONS

P	LTR	DESCRIPTION	DATE	DWN	APVD
	H	REV / OL20-0014-96	28OCT96	ME	TM

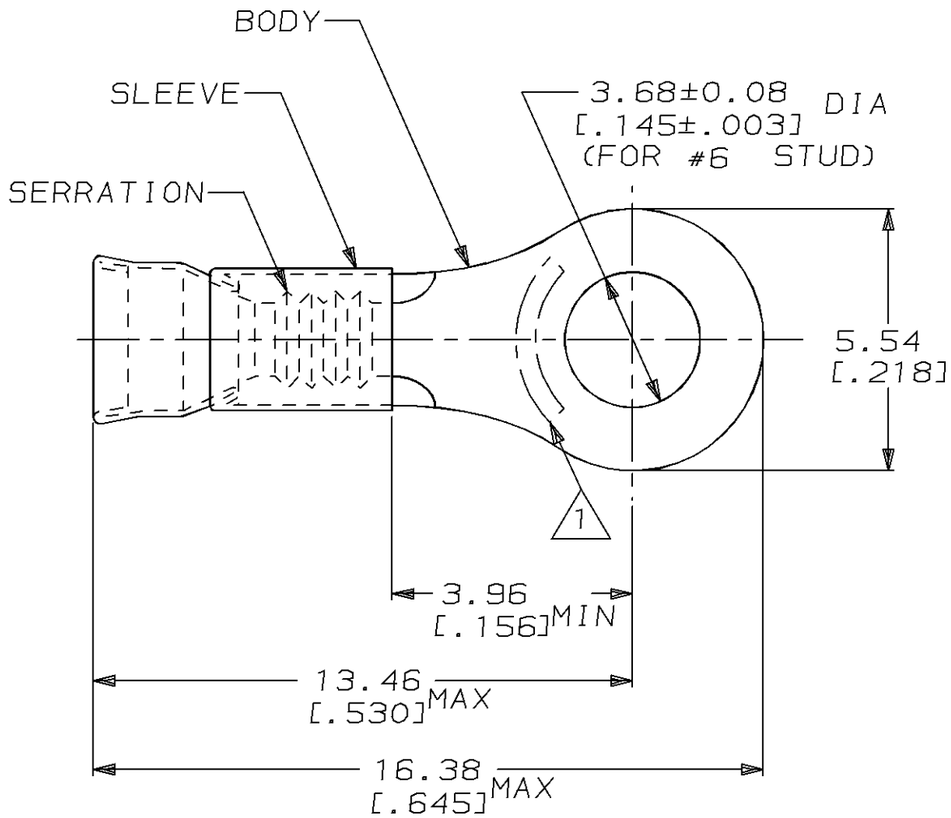

1. STAMP AMP 22-18* APPROX AS SHOWN 22-16 TERMINALS ARE STAMPED 22-18 IN ACCORDANCE WITH MILITARY SPEC MIL-T-7928 COMMERCIAL WIRE RANGE IS 22-16
2. WIRE INSUL DIA, 1.30-2.79 [.051-.110]
3. TONGUE MATL THK, 0.79±0.05 [.031±.002]
4. NICKEL PL PER QQ-N-290
5. GOLD PL PER MIL-G-45204 OVER NICKEL PL PER QQ-N-290

QTY	PACKAGE TYPE	PART NO
1000	LOOSE PIECE	5 323151-1
1000	LOOSE PIECE	4 323151

AMP INCORPORATED
CUSTOMER SERVICE SYSTEM

FOR ADDITIONAL PRODUCT INFORMATION OR COPIES OF DRAWINGS AND TECHNICAL DOCUMENTS	PRODUCT INFORMATION CENTER 1-800-522-6752
FOR APPLICATION TOOLING INFORMATION	TOOLING ASSISTANCE CENTER 1-800-722-1111
FOR ORDER ENTRY	1-800-526-5142

MAX RECOMMENDED OPERATING TEMPERATURE: 343°C [650°F]

VOLTAGE RATING: - -

CIRCULAR MIL AREA: 0.26mm²-1.65mm² [509-3260]

STRANDED WIRE

THIS DRAWING IS A CONTROLLED DOCUMENT FOR AMP INCORPORATED. IT IS SUBJECT TO CHANGE AND THE CONTROLLING ENGINEERING ORGANIZATION SHOULD BE CONTACTED FOR THE LATEST REVISION.

DIMENSIONS: mm [in]

TOLERANCES UNLESS OTHERWISE SPECIFIED,

0 PLC	±-
1 PLC	±-
2 PLC	±0.20 [.008]
3 PLC	±-
4 PLC	±-
ANGLES	±-

MATERIAL: BODY, CU PER ASTM B152; SLEEVE, NI SIL PER ASTM B122

FINISH: SEE TABLE

DWN	L OLMEDA	10OCT94
CHK	M ELLIS	10OCT94
APVD	S BORTNER	10OCT94
PRODUCT SPEC	–	
APPLICATION SPEC	–	
WEIGHT	–	

AMP Incorporated
Harrisburg, PA 17105-3608

NAME: TERMINAL, RING TONGUE, STRATOTHERM, DIAMOND GRIP, WIRE SIZE, 22-16 AWG

SIZE	CAGE CODE	DRAWING NO
A3	00779	C-323151

CUSTOMER DRAWING

SCALE	SHEET	OF	REV
6:1	1	1	H

AMP 1470-19 REV 09MAY94

Downloaded From Oneyac.com

28 OCT 1996 09:45:51 AMP10398 <UU128A>DEPT1132>U.DW01132>U.RBT>U.DIAMOND-GRIP>U.STRA[OTHERM>U.CUST

单击下面可查看定价，库存，交付和生命周期等信息

>>TE Connectivity(泰科)

Downloaded From Oneyac.com