THIS DRAWING IS UNPUBLISHED. RELEASED FOR PUBLICATION 20
© COPYRIGHT 20 BY TYCO ELECTRONICS CORPORATION. ALL RIGHTS RESERVED.

LOC	DIST
-	-

REVISIONS

P	LTR	DESCRIPTION	DATE	DWN	APVD
	B	REV PER ECO-08-032072	15JAN2009	CR	PD
	C	REV PER ECO-10-019210	04NOV2010	RG	MS

1. PART NUMBER CHANGES AND OR DESIGN CHANGES AFFECTING ITEM INTERCHANGEABILITY REQUIRE PRIOR TYCO ELECTRONICS APPROVAL AND AUTHORIZATION BY REVISION TO THIS DRAWING.

2. MATERIALS:
   INSULATORS: THERMOPLASTIC, GLASS REINFORCED UL94V-0 FLAMMABILITY RATED.
   CONTACTS: COPPER ALLOY

3. FINISHES:
   CONTACT PLATING: SELECTIVE GOLD: 0.76µm MIN THK OVER NICKEL: 1.27µm MIN THK
   TERMINALS: TIN: 1.78µm THK OVER NICKEL: 1.27µm MIN THK

4. CONNECTOR ACCEPTS 1.57±.13 THK PCB.

5. KEEP OUT AREA FOR COMPONENTS ONLY.

6. RECOMMENDED PRINTED CIRCUIT HOLE
   FINISHED HOLE: Ø1.02±.08
   DRILLED HOLE: Ø1.15±.013
   COPPER PLATE: .025 MINIMUM (PER SURFACE)
   TIN PLATE: .008 MINIMUM (PER SURFACE)

7. FEATURE REQUIRED FOR USE WITH LATCH.

8. CAUTION: LATCHES ARE INTENDED FOR RETENTION OF PC BOARD TO CONNECTOR. DO NOT ATTEMPT TO FULLY EJECT PC BOARD FROM CONNECTOR WHILE DISENGAGING LATCHES. DAMAGE TO LATCHES AND OR CONNECTOR MAY OCCUR.

9. RECOMMENDED GOLD FINGER LENGTH FOR RELIABLE CONTACT.

10. ITEMS PROVIDED TO THIS SPECIFICATION TO BE PERMANENTLY IDENTIFIED PER THE FOLLOWING IDENTIFIER:

TYCO ELECTRONICS PN: XXXXXXX-X

DATE CODE (e.g. 0325): YEAR WEEK — XXXX

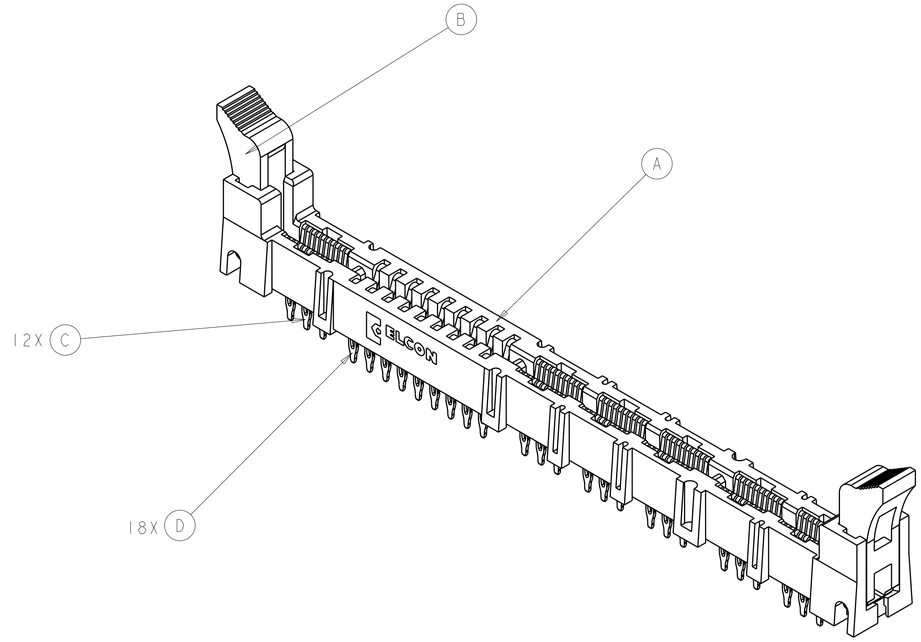

ITEM	PART NO.	DESCRIPTION	
18	1651808-2	CONTACT, SIGNAL	D
12	1651807-2	CONTACT, POWER	C
2	1651724-1	MINI-CROWNEDGE LATCH	B
1	1651723-1	HSG, SKT, MC-P6S9, MINI-CROWNEDGE	A

THIS DRAWING IS A CONTROLLED DOCUMENT FOR TYCO ELECTRONICS CORPORATION. IT IS SUBJECT TO CHANGE AND THE CONTROLLING ENGINEERING ORGANIZATION SHOULD BE CONTACTED FOR THE LATEST REVISION.

DIMENSIONS: mm

TOLERANCES UNLESS OTHERWISE SPECIFIED:
0 PLC ±-
1 PLC ±.5
2 PLC ±.25
3 PLC ±-
4 PLC ±-
ANGLES ±.5

MATERIAL - 2
FINISH - 3

DWN C.ROHLER 15JAN2009
CHK P.DAMATO 15JAN2009
APVD M.PERCHERKE 15JAN2009

Tyco Electronics
Tyco Electronics
Harrisburg, PA 17105-3608

NAME: TOP ASSEM MC-P6S9, SOCKET CONNECTOR MINI CROWN EDGE,W/LATCHES,COMPLIANT PN 283-0172-04003

PRODUCT SPEC -
APPLICATION SPEC -
WEIGHT -

SIZE A1 | CAGE CODE 00779 | DRAWING NO C-1766436 | RESTRICTED TO -

CUSTOMER DRAWING | SCALE 1:1 | SHEET 1 OF 4 | REV C

AMP 4805 REV 31MAR2000

Pro/ENGINEER DRAWING

Downloaded From Oneyac.com

THIS DRAWING IS UNPUBLISHED. RELEASED FOR PUBLICATION 20
© COPYRIGHT 20 BY TYCO ELECTRONICS CORPORATION. ALL RIGHTS RESERVED.

LOC	DIST
-	-

REVISIONS

P	LTR	DESCRIPTION	DATE	DWN	APVD
	-	SEE SHEET 1	-	-	-

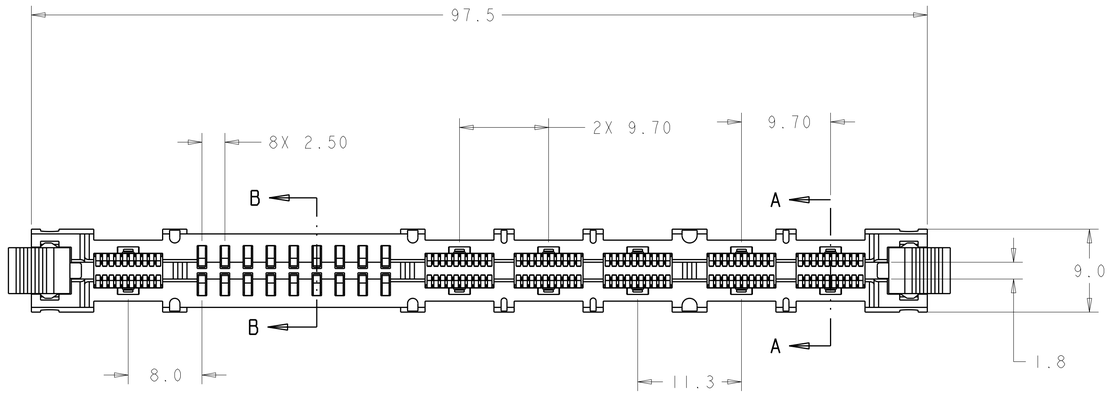

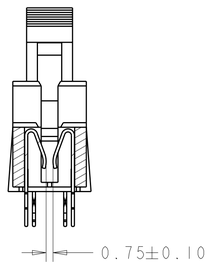

SECTION B-B
ROTATED 90° CW

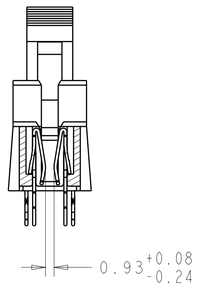

SECTION A-A
ROTATED 90° CW

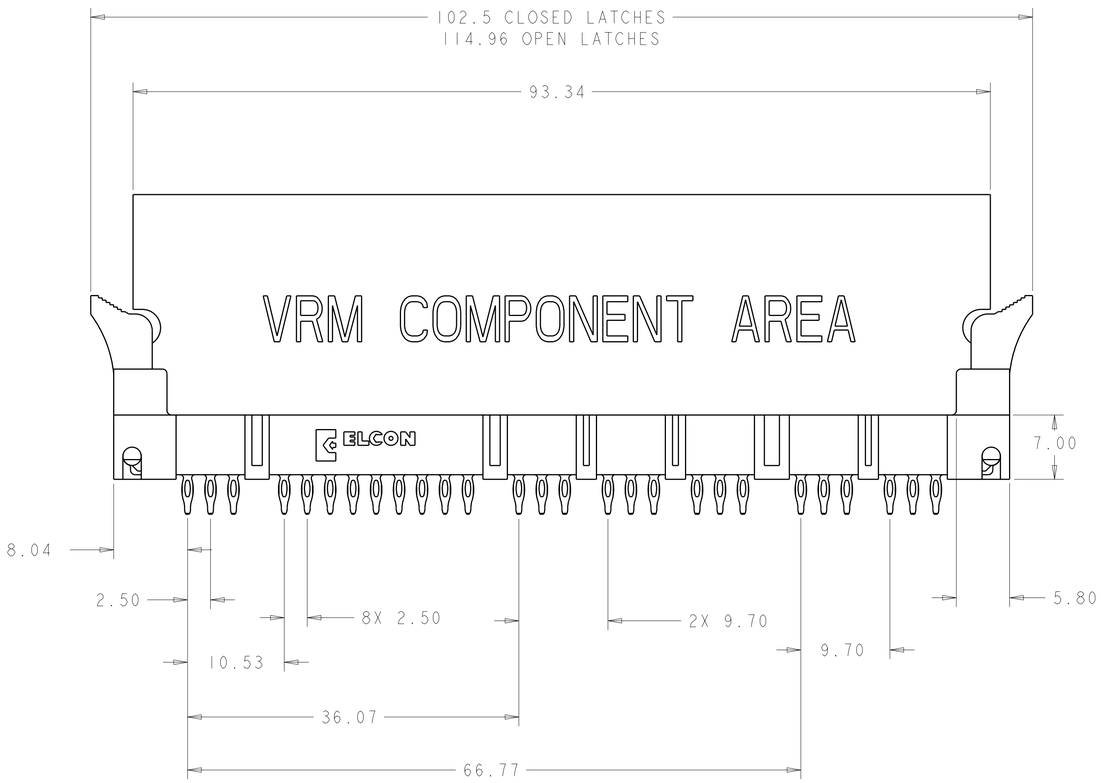

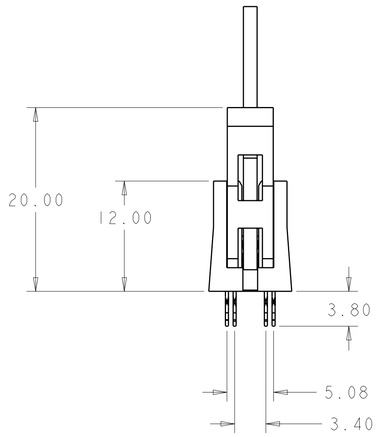

THIS DRAWING IS A CONTROLLED DOCUMENT FOR TYCO ELECTRONICS CORPORATION. IT IS SUBJECT TO CHANGE AND THE CONTROLLING ENGINEERING ORGANIZATION SHOULD BE CONTACTED FOR THE LATEST REVISION.

DIMENSIONS: mm

TOLERANCES UNLESS OTHERWISE SPECIFIED:
0 PLC ±-
1 PLC ±.5
2 PLC ±.25
3 PLC ±-
4 PLC ±-
ANGLES ±5

MATERIAL - -
FINISH - -

DWN	C. ROHLER	15JAN2009
CHK	P. DAMATO	15JAN2009
APVD	M. PERCHERKE	15JAN2009

PRODUCT SPEC -
APPLICATION SPEC -
WEIGHT -

Tyco Electronics
Tyco Electronics
Harrisburg, PA 17105-3608

NAME
TOP ASSEM MC-P6S9, SOCKET CONNECTOR
MINI CROWN EDGE,W/LATCHES,COMPLIANT
PN 283-0172-04003

SIZE	CAGE CODE	DRAWING NO	RESTRICTED TO
A1	00779	C-1766436	-

CUSTOMER DRAWING | SCALE 1:1 | SHEET 2 OF 4 | REV C

AMP 4805 REV 31MAR2000

Downloaded From: Oneyac.com

THIS DRAWING IS UNPUBLISHED. RELEASED FOR PUBLICATION 20
© COPYRIGHT 20 BY TYCO ELECTRONICS CORPORATION. ALL RIGHTS RESERVED.

LOC	DIST
-	-

REVISIONS

P	LTR	DESCRIPTION	DATE	DWN	APVD
	-	SEE SHEET 1	-	-	-

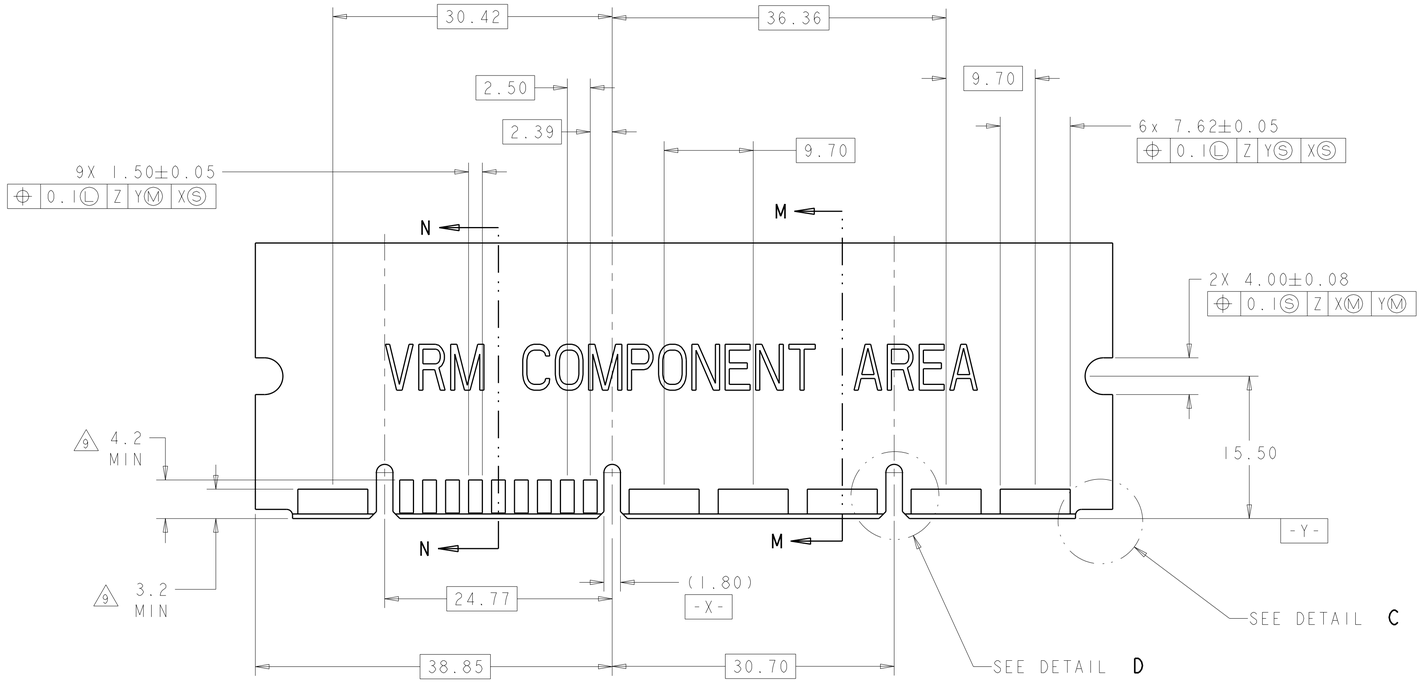

RECOMMENDED MATING BOARD

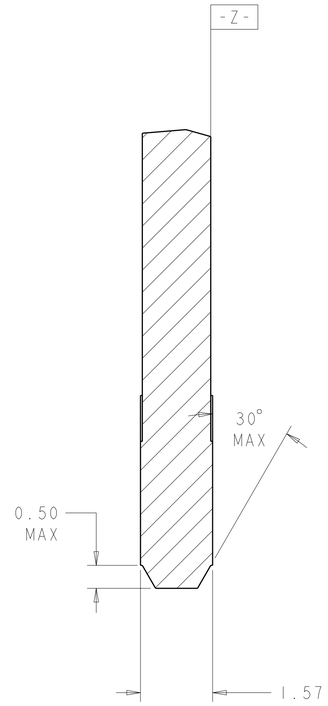

SECTION M-M
SCALE 15:1

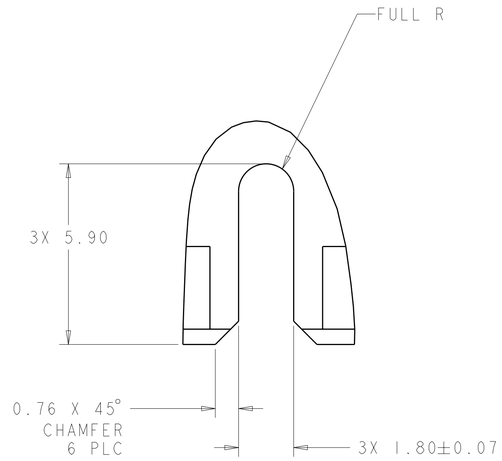

DETAIL D
SCALE 10:1

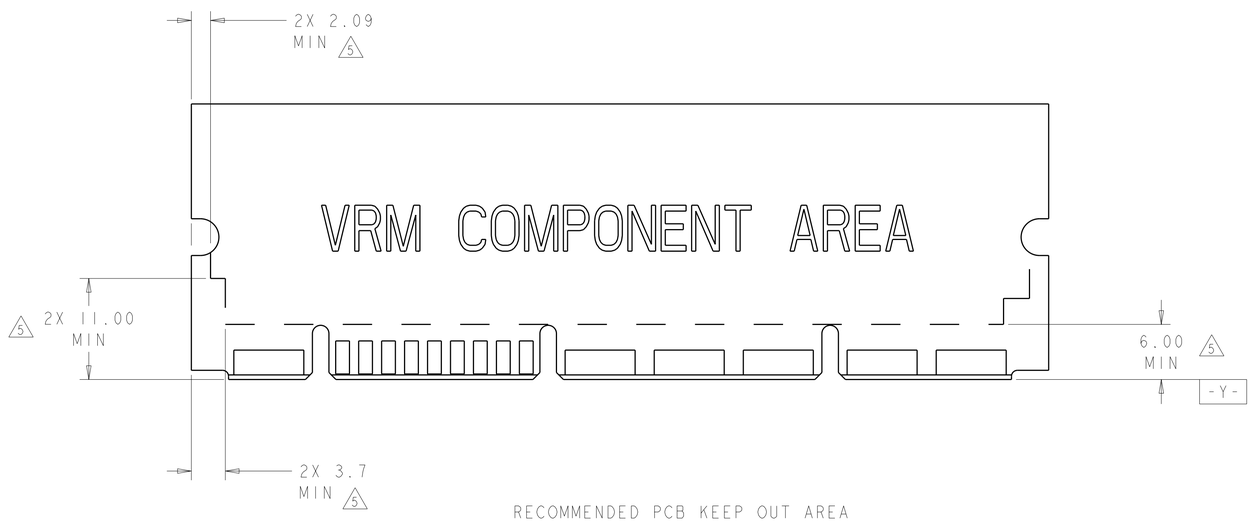

RECOMMENDED PCB KEEP OUT AREA

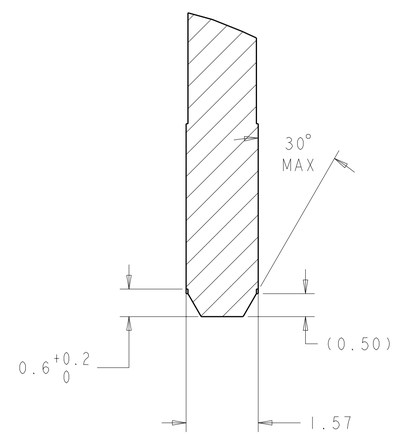

SECTION N-N
SCALE 15:1

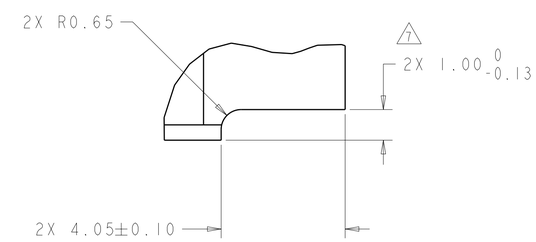

DETAIL C
SCALE 10:1

THIS DRAWING IS A CONTROLLED DOCUMENT FOR TYCO ELECTRONICS CORPORATION. IT IS SUBJECT TO CHANGE WITHOUT NOTICE. ANY ORGANIZATION SHOULD BE CONTACTED FOR THE LATEST REVISION.

DIMENSIONS: mm

TOLERANCES UNLESS OTHERWISE SPECIFIED:
0 PLC ±-
1 PLC ±.5
2 PLC ±.25
3 PLC ±-
4 PLC ±-
ANGLES ±.5

MATERIAL - - -
FINISH - -

DWN C. ROHLER	15JAN2009	Tyco Electronics — Tyco Electronics, Harrisburg, PA 17105-3608
CHK P. DAMATO	15JAN2009	
APVD M. PERCHERKE	15JAN2009	NAME TOP ASSEM MC-P6S9, SOCKET CONNECTOR MINI CROWN EDGE,W/LATCHES,COMPLIANT PN 283-0172-04003
PRODUCT SPEC -		
APPLICATION SPEC -		
WEIGHT -		SIZE A1 · CAGE CODE 00779 · DRAWING NO C-1766436 · RESTRICTED TO -
CUSTOMER DRAWING		SCALE 1:1 · SHEET 3 OF 4 · REV C

AMP 4805 REV 31MAR2000

Downloaded From Oneyac.com

THIS DRAWING IS UNPUBLISHED. RELEASED FOR PUBLICATION 20
© COPYRIGHT 20 BY TYCO ELECTRONICS CORPORATION. ALL RIGHTS RESERVED.

LOC	DIST
-	-

REVISIONS

P	LTR	DESCRIPTION	DATE	DWN	APVD
	-	SEE SHEET 1	-	-	-

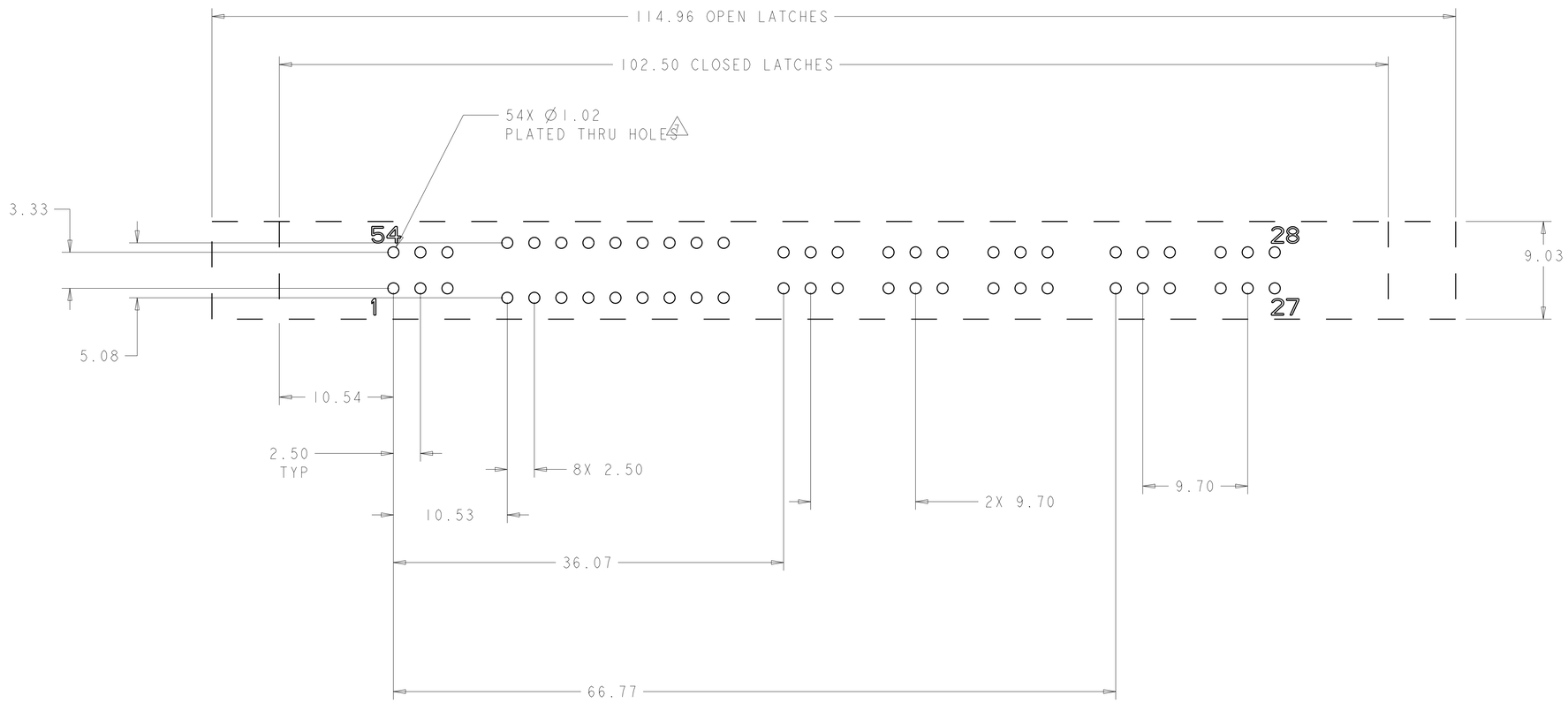

RECOMMENDED PC LAYOUT (VIEW FROM CONNECTOR SIDE)
SCALE 4:1

THIS DRAWING IS A CONTROLLED DOCUMENT FOR TYCO ELECTRONICS CORPORATION. IT IS SUBJECT TO CHANGE AND THE CONTROLLING ENGINEERING ORGANIZATION SHOULD BE CONTACTED FOR THE LATEST REVISION.

DIMENSIONS: mm

TOLERANCES UNLESS OTHERWISE SPECIFIED:
0 PLC ±-
1 PLC ±.5
2 PLC ±.25
3 PLC ±-
4 PLC ±-
ANGLES ±.5

MATERIAL - -

FINISH - -

DWN C.ROHLER 15JAN2009
CHK P.DAMATO 15JAN2009
APVD M.PERCHERKE 15JAN2009

PRODUCT SPEC -
APPLICATION SPEC -
WEIGHT -

Tyco Electronics
Tyco Electronics
Harrisburg, PA 17105-3608

NAME
TOP ASSEM MC-P6S9, SOCKET CONNECTOR
MINI CROWN EDGE,W/LATCHES,COMPLIANT
PN 283-0172-04003

SIZE	CAGE CODE	DRAWING NO	RESTRICTED TO
A1	00779	C-1766436	-

CUSTOMER DRAWING | SCALE 4:1 | SHEET 4 OF 4 | REV C

AMP 4805 REV 31MAR2000

Downloaded From Oneyac.com

单击下面可查看定价，库存，交付和生命周期等信息

>>TE Connectivity(泰科)

Downloaded From Oneyac.com