DRAWING MADE IN AMERICAN PROJECTION

©1968 BY AMP INCORPORATED. ALL RIGHTS RESERVED. AMP PRODUCTS COVERED BY PATENTS AND/OR PATENTS PENDING.

THIS PRODUCT DESIGNED AND BUILT BY AMP INCORPORATED. NO LICENSE TO USE THAT DESIGN IN MANUFACTURE, OR TO USE ANY ISSUED OR PENDING PATENTS WHICH ARE INVOLVED, IS IMPLIED.

NUMBER

REVISIONS

ZONE	LTR	DESCRIPTION	DATE	APPROVED
	–	REF SD 25215B		
C-4	A	REV. PIN NO'S 6-7-68	6/10/68	
2-C	B	SHORTENED LENGTH OF THD.	6-17-68	
2-B, 2-C 4-B	C	ADDED .69, .56, .09 R, 30° DIM'S.	8-5-68	
2-C, 3-B 3-C, 4-C	D	ADDED .031, .122, .056, .125, .250 R., .375, .38, .969, .755 DIM'S.	9-19-68	

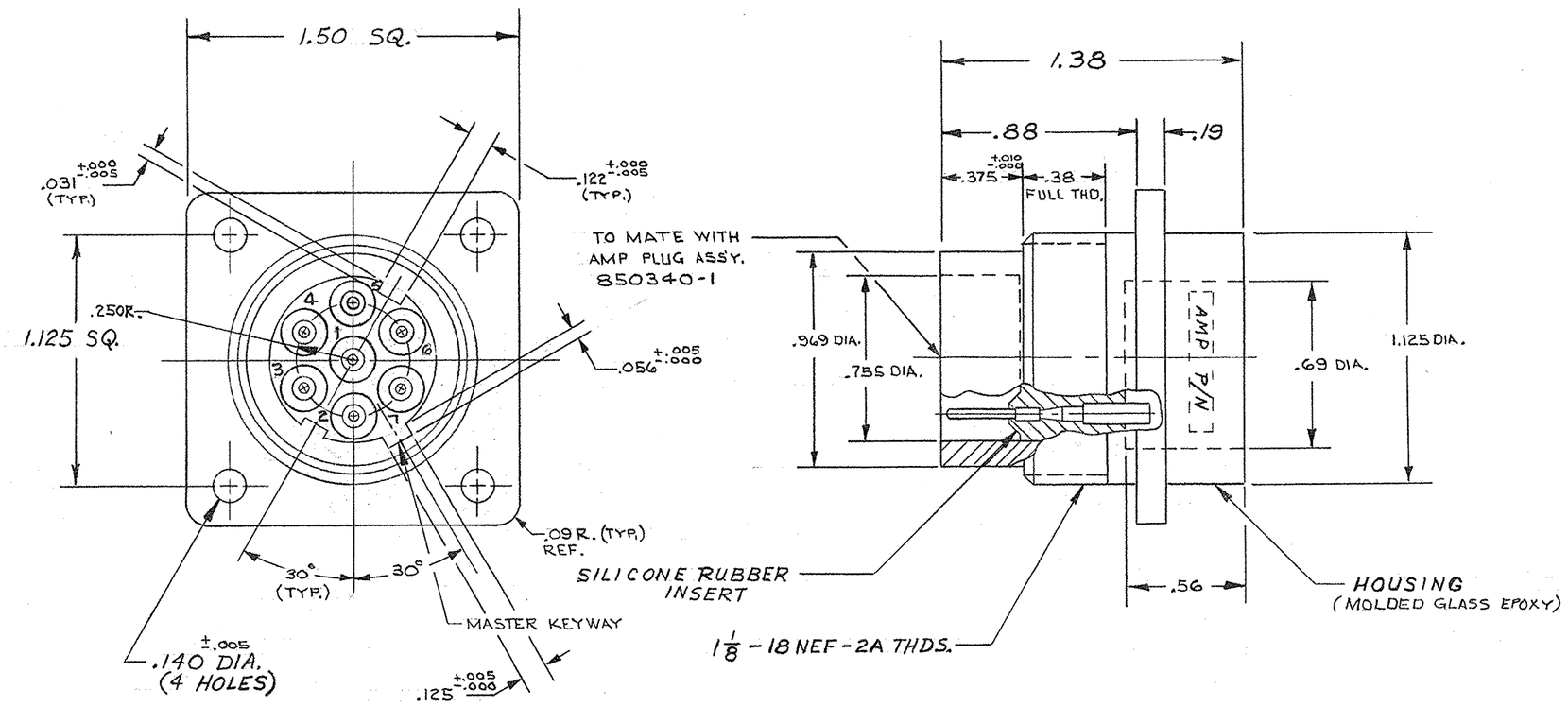

NOTES:

1. CUSTOMER TO ATTACH LEADS & ENCAPSULATE AGAINST BREAKDOWN.
2. PINS ARE #20 GA.
3. CONTACT NO'S. ARE MARKED ON RECEP.

PART NO IS THIS DWG—1

QTY REQD –2	QTY REQD –1	ITEM NO.	DWG SIZE	PART OR IDENTIFYING NO.	NOMENCLATURE OR DESCRIPTION	SYMBOL
					PARTS LIST	

NEXT ASSY	FINAL ASSY	NEXT ASSY	USED ON
	1		850342-1
QTY REQD		APPLICATION	

UNLESS OTHERWISE SPECIFIED:
DIMENSIONS ARE IN INCHES
TOLERANCES
.00 = ±.03 ANGLES = ±0°30'
.000 = ±.010

MATERIAL: SEE ABOVE

FINISH: NATURAL

CONTRACT NO.

DR L. Geib 5-2-68

CHK

APPD

APPD

DSGN APPD 5-7 68

OTHER APPD

AMP INCORPORATED
CAPITRON DIVISION
ELIZABETHTOWN, PENNSYLVANIA

NAME 7 PIN RECEPTACLE WITH MOUNTING FLANGE (LGH)

SIZE	CODE IDENT NO.	NUMBER
C	00779	850341

SCALE | WT | SHEET 1 OF 1

PRINT DIST 137

AMP 1471 REV 8/66

Downloaded From Oneyac.com

CUSTOMER DRAWING

单击下面可查看定价，库存，交付和生命周期等信息

>>TE Connectivity(泰科)

Downloaded From Oneyac.com