THIS DRAWING IS UNPUBLISHED. RELEASED FOR PUBLICATION MAR ,2006.
© COPYRIGHT 2006 By – ALL RIGHTS RESERVED.

REVISIONS

P	LTR	DESCRIPTION	DATE	DWN	APVD
	C2	REVISED PER ECR-21-112844	07SEP2021	RZ	WK

NOTES

1. 100 TRAY PACK IN ACCORDANCE WITH AMP SPEC 107-3275
2. SINGLE PACK IN ACCORDANCE WITH AMP SPEC 107-3275
3. Au PLATING
4. Ni PLATING
5. FOR TECHNICAL DATA REFER TO YOUR LOCAL TE CONNECTIVITY SALES OFFICE
6. ALL DIMENSIONS ARE NOMINAL FOR REFERENCE ONLY UNLESS OTHERWISE STATED
7. DURABILITY: 50 CYCLES

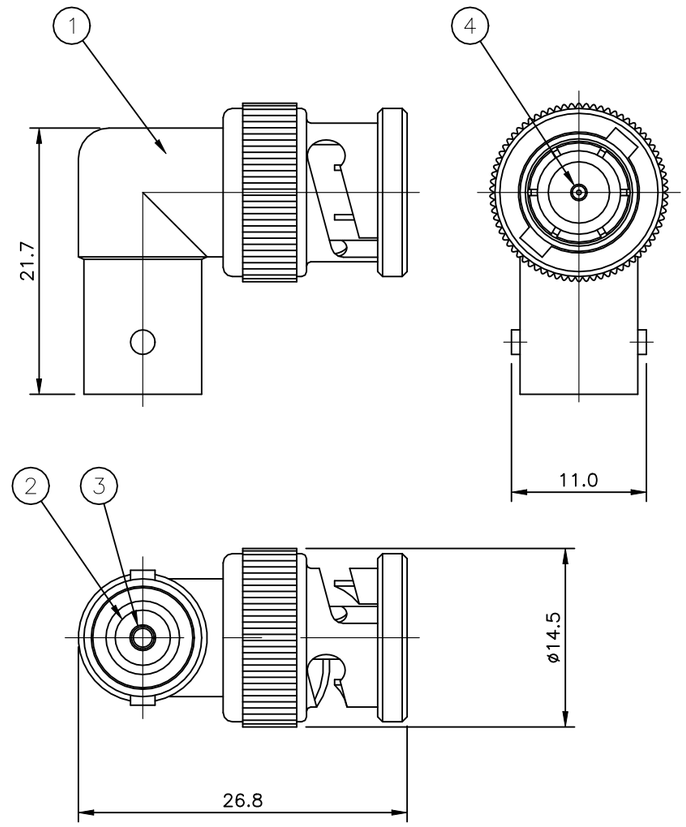

						Obsolete			
					1	1	BRASS 3	MALE CONTACT	4
					1	1	PHOS BRONZE 3	FEMALE CONTACT	3
					1	1	PE-606	INSULATOR	2
					1	1	ZINC ALLOY 4	BODY	1
					5--1	5--0	MATERIAL	DESCRIPTION	ITEM
					2	1			
QUANTITY PER ASSY							PARTS LIST		

THIS DRAWING IS A CONTROLLED DOCUMENT.

DIMENSIONS: mm

TOLERANCES UNLESS OTHERWISE SPECIFIED:

0 PLC	± 0.5
1 PLC	± 0.3
2 PLC	± 0.2
3 PLC	± –
4 PLC	± –
ANGLES	± –

MATERIAL: SEE TABLE

FINISH: –

DWN RITA ZUO 10 Mar 09
CHK ANSON MA 10 Mar 09
APVD BOB ZHAO 10 Mar 09
PRODUCT SPEC 108-112000
APPLICATION SPEC —
WEIGHT 0.000000

TE Connectivity

NAME: BNC ELBOW ADAPTOR PLUG – JACK 50 OHMS –

SIZE	CAGE CODE	DRAWING NO	RESTRICTED TO
A3	00779	C-1634526	—

CUSTOMER DRAWING

SCALE NTS | SHEET 1 OF 1 | REV C2

1470-19 (1/15)

Downloaded From Oneyac.com

单击下面可查看定价，库存，交付和生命周期等信息

>>TE Connectivity(泰科)

Downloaded From Oneyac.com