THIS DRAWING IS UNPUBLISHED. RELEASED FOR PUBLICATION -,- .
© COPYRIGHT - BY TYCO ELECTRONICS CORPORATION. ALL RIGHTS RESERVED.

LOC	DIST
AJ	00

REVISIONS

P	LTR	DESCRIPTION	DATE	DWN	APVD
	B	REVISED PER EC 0S14-0098-05	04MAY2006	KS	KW

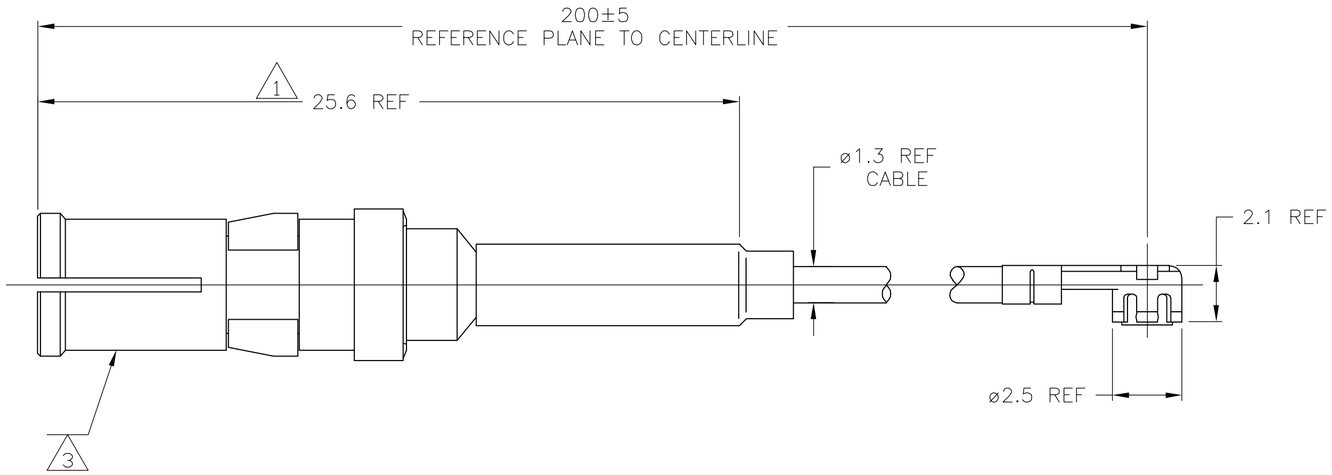

1. THIS DIMENSION REPPRESENTS THE LENGTH FROM REFERENCE PLANE OR CENTERLINE TO CABLE EXIT POINT (VISIBLE CABLE)
2. ELECTRICAL PERFORMANCE SHOWN FOR SSMT CONNECTOR AND CABLE ONLY FOR CABLE ASSEMBLY DATA CONSULT FACTORY
3. D-SUB COAXIAL CONTACT RECEPTACLE MEETS THE INTERFACE REQUIREMENTS OF SPECIFICATION KS22694

COMPONENT	MATERIAL	FINISH
D-SUB CONNECTOR		
HOUSING & COUPLING NUT	STAINLESS STEEL	PASSIVATE
CENTER CONTACT	BERYLLIUM COPPER	GOLD PLATE
INNER CONTACT	BERYLLIUM COPPER	GOLD PLATE
DIELECTRIC	POLYTETRAFLUOROETHYLENE (PTFE)	N/A
RETAINING RING	BERYLLIUM COPPER	GOLD PLATE
GASKET	SILICONE RUBBER	N/A
FERRULE	COPPER OR BRASS	NICKEL PLATE
SHRINK TUBING	HEAT SHRINKABLE POLYOLEFIN COMPOUND	N/A
SSMT CONNECTOR		
OUTER CONTACT	BERYLLIUM COPPER	GOLD PLATE OVER NICKEL PLATE
CENTER CONTACT	BERYLLIUM COPPER	GOLD PLATE OVER NICKEL PLATE
DIELECTRIC	POLYPROPYLENE, GF	N/A
CABLE		
JACKET	FLUORINATED ETHYLENE PROPYLENE (FEP)	N/A
SHIELD	COPPER WIRE, 44 AWG	SILVER PLATE
DIELECTRIC	POLYTETRAFLUOROETHYLENE (PTFE)	N/A
CENTER CONDUCTOR	COPPER CLAD STEEL, 30 AWG	SILVER PLATE
INSULATING DISK	POLYESTER	N/A

AMP 1471-9 REV 31MAR2000

1064559-1

PART NUMBER

1064559

ELECTRICAL	
FREQUENCY	DC - 6 GHz
NOMINAL IMPEDENCE	50 OHMS
VOLTAGE RATING	250 VOLTS (VRMS MAX) @ SEA LEVEL
VSWR (MATED CONNECTORS ONLY)	1.20:1 MAX @ 2 GHz 1.40:1 MAX @ 6 GHz
INSULATION RESISTANCE	1,000 MEGOHMS MIN @ 250VDC
DIELECTRIC WITHSTANDING VOLTAGE	500 VOLTS (VRMS MIN) @ SEA LEVEL
MECHANICAL	
CONNECTOR DURABILITY	100 MATING CYCLES
ENVIRONMENTAL	
TEMPERATURE RATING	-40°C(-40°F) TO +125°C(257°F)

PRODUCT SPEC

THIS DRAWING IS A CONTROLLED DOCUMENT.

DIMENSIONS: mm

TOLERANCES UNLESS OTHERWISE SPECIFIED:
0 PLC ± -
1 PLC ± -
2 PLC ± -
3 PLC ± 0.13
4 PLC ± -
ANGLES ± 1°

MATERIAL -

FINISH -

DWN DK SCHRUM 04MAY2006
CHK KE WEIDNER 04MAY2006
APVD KE WEIDNER 04MAY2006
PRODUCT SPEC —
APPLICATION SPEC —
WEIGHT —

Tyco Electronics Corporation
Harrisburg, PA 17105-3608

NAME
SSMT RIGHT ANGLE JACK
TO SMA STRAIGHT PLUG
INTERSERIES CABLE ASSEMBLY

SIZE	CAGE CODE	DRAWING NO	RESTRICTED TO
A2	00779	C-1064559	—

CUSTOMER DRAWING | SCALE NTS | SHEET 1 OF 1 | REV B

Downloaded From Oneyac.com

单击下面可查看定价，库存，交付和生命周期等信息

>>TE Connectivity(泰科)

Downloaded From Oneyac.com