THIS DRAWING IS UNPUBLISHED. RELEASED FOR PUBLICATION 1997
© COPYRIGHT 1997 BY TYCO ELECTRONICS CORPORATION. ALL RIGHTS RESERVED.

| LOC | DIST |
|---|---|
| A1 | – |

REVISIONS

| P | LTR | DESCRIPTION | DATE | DWN | APVD |
|---|---|---|---|---|---|
| | B2 | Released as per ECR-07-019955 | 22.08.07 | SK | TS |
| | B3 | REVISED PER ECO-09-027197 | 21JAN10 | KK | HMR |

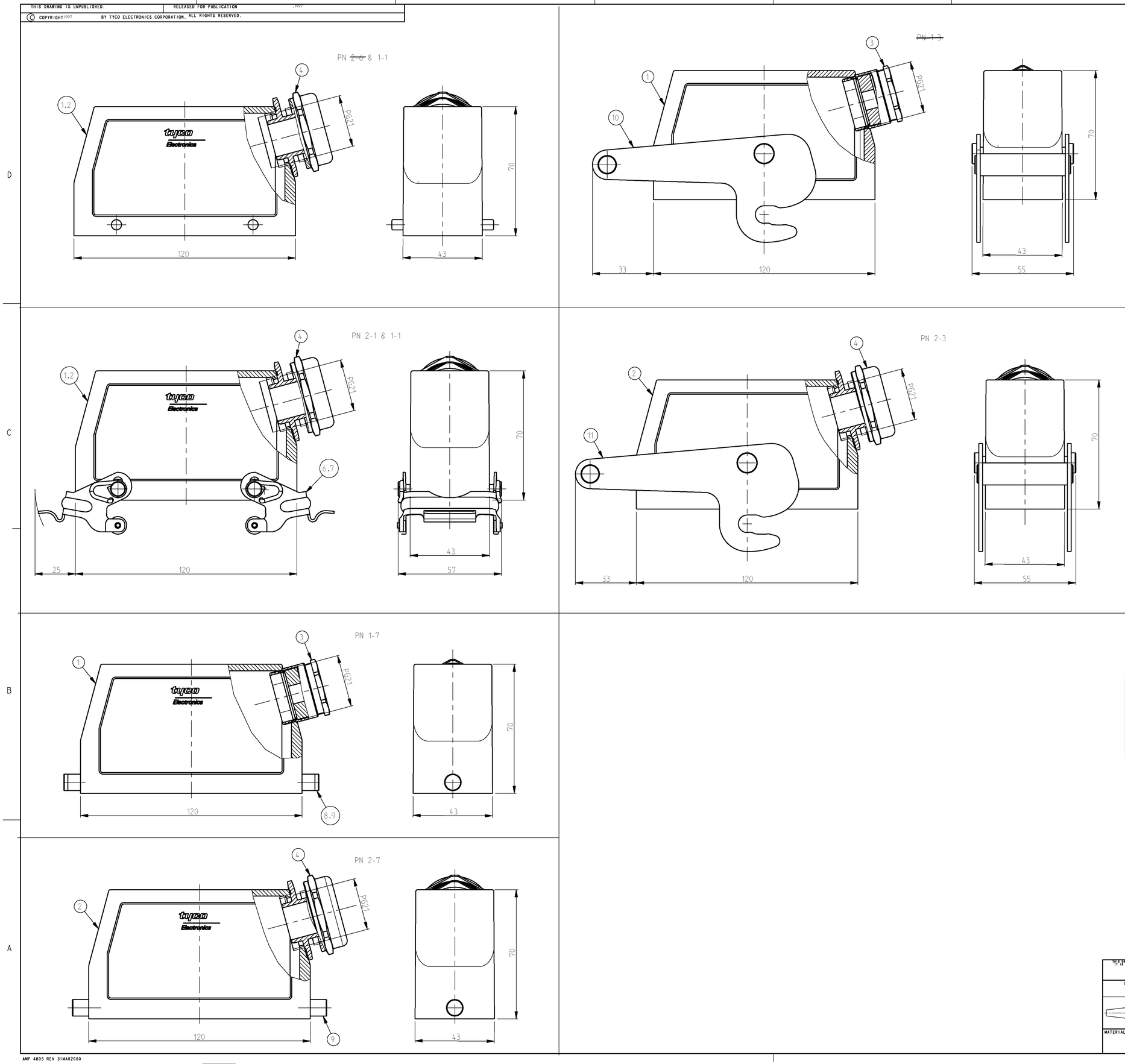


NOTES.

1 Material:Housing:Aluminium Diecasting Alloy

2 Surface:Varnish grey

3 Varnish on the inside not necessary

4 Packaging
Quantity 5 Pieces in a box

5 OBSOLETE PARTS: OBSOLETE CIS STREAMLINING PER D.RENAUD/D.SINISI

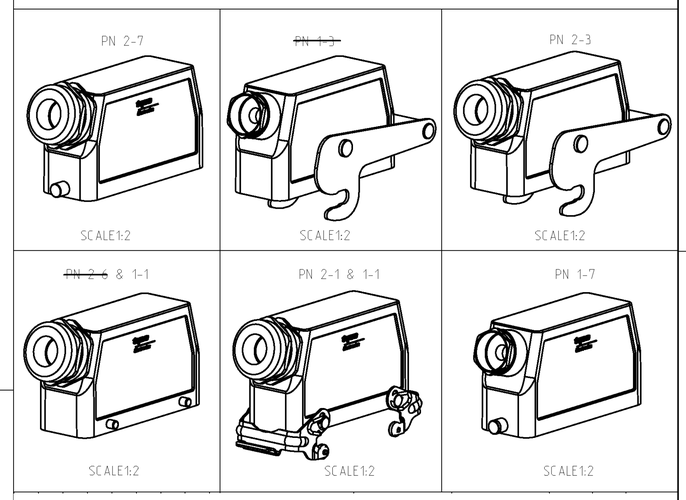


OBSOLETE 5 | OBSOLETE 5

| 2-3 | 1-3 | 2-7 | 1-7 | 2-1 | 1-1 | 2-6 | 1-6 | DESCRIPTION | MATERIAL | SURFACE | COLOR | TEM NO | REMARKS |
|---|---|---|---|---|---|---|---|---|---|---|---|---|---|
| 1 | | | | | | | | ZB-Central clip | Stainless steel | - | | 11 | |
| | | | | | | | | ZB-Central clip | Steel | Zinc plated | Blue | 10 | |
| | | 2 | | | | | | VS-Clip bolt | Stainless steel | - | | 9 | |
| | | | 2 | | | | | VS-Clip bolt | Steel | Zinc plated | Blue | 8 | |
| | | | | 2 | | | | VS-Locking clip | Stainless steel | - | | 7 | |
| | | | | | 2 | | | VS-Locking clip | Steel | Zinc plated | Blue | 6 | |
| | | | | | | 4 | | VS-Locking clip bolt | Stainless steel | - | | 5 | |
| 1 | | 1 | | 1 | | | | Cable connection round | Brass | Nickel plated | | 4 | |
| | | | 1 | | 1 | | 1 | PG-Gland fitting pg21 | Brass | Nickel plated | | 3 | |
| 1 | | 1 | | 1 | | | | Hood HB.24.Pg.1.21 | Aluminium | Aluminiumoxide | Black | 2 | |
| | | | 1 | | 1 | | 1 | Hood HB.24.Pg.1.21 | Aluminium | - | Grey | 1 | |

DESCRIPTION
HB.24.Sts.1.21
HB-K.24.Sts.1.21
HB.24.Sts-VS.1.21
HB-K.Sts-VS.1.21
HB.24.Sts-GR.1.21
HB-K.24.Sts-GR.1.21
HB-Z.24.Sts.ZB.1.21
HB-K/Z.24.Sts-ZB.1.21

THIS DRAWING IS A CONTROLLED DOCUMENT FOR TYCO ELECTRONICS CORPORATION. IT IS SUBJECT TO CHANGE AND THE CONTROLLING ENGINEERING ORGANIZATION SHOULD BE CONTACTED FOR THE LATEST REVISION.

DIMENSIONS: mm

TOLERANCES UNLESS OTHERWISE SPECIFIED:
± .002 INCH
± .050 MM
± .002 INCH AND ± .050 MM WHICHEVER IS GREATER
0 PLC ±
1 PLC ±
2 PLC ±
3 PLC ±
4 PLC ±
ANGLES ±

MATERIAL

FINISH

DWN Schweiger 17.07.1997
CHK Schnurfeil 17.07.1997
APVD –
PRODUCT SPEC 108-74001 108-74003
APPLICATION SPEC 114-74001 114-74004
WEIGHT

Tyco Electronics
Tyco Electronics,AMP.GmbH
D-53819,Neunkirchen,Germany

NAME Hood HB.24

| SIZE | CAGE CODE | DRAWING NO | RESTRICTED TO |
|---|---|---|---|
| A1 | 00779 | C-1102314 | – |

CUSTOMER DRAWING SCALE 1:1 SHEET 1 OF 1 REV B3

AMP 4805 REV 31MAR2000

Downloaded From Oneyac.com

Pro/ENGINEER DRAWING

单击下面可查看定价，库存，交付和生命周期等信息

>>TE Connectivity(泰科)

Downloaded From Oneyac.com