DRAWING MADE IN THIRD ANGLE PROJECTION

THIS DRAWING IS UNPUBLISHED. RELEASED FOR PUBLICATION ,19 .

© COPYRIGHT 19 BY AMP INCORPORATED. ALL INTERNATIONAL RIGHTS RESERVED.

LOC	DIST
AD	25

			REVISIONS			
P	F	ZONE	LTR	DESCRIPTION	DATE	APPD
			O	DRAWN	–	–
			B	ECN AD5586; AD5640	6/10/91	LSB
			C	ECN AD5876	11/14/91	LSB
			D	ECN AD5871	12/30/91	LSB
			E	ECN AD6256	6/2/92	LSB
			F	EC 0010-0151-94	2/7/94	LSB
			G	EC 0010-0436-94	3/25/94	LSB
			H	EC 0010-0077-95	2/24/95	LSB

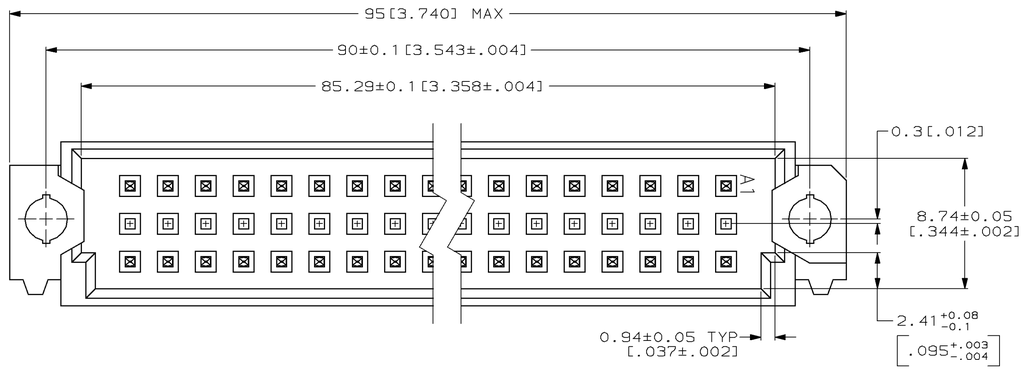

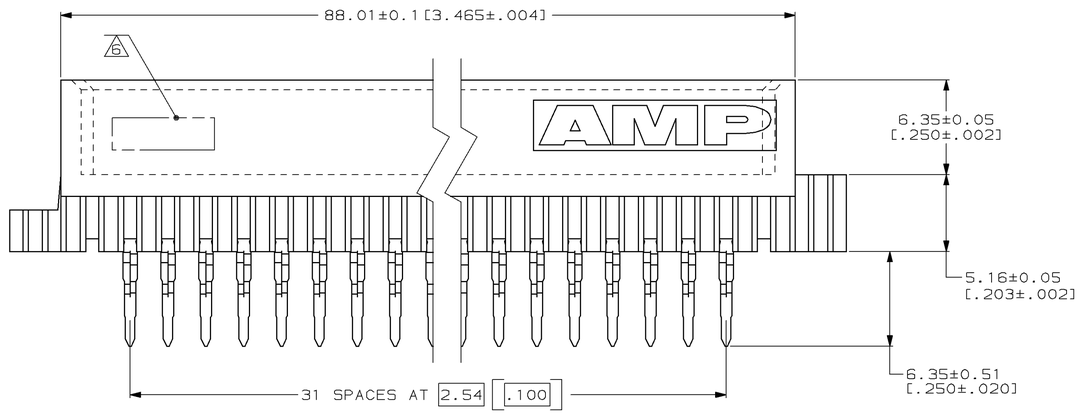

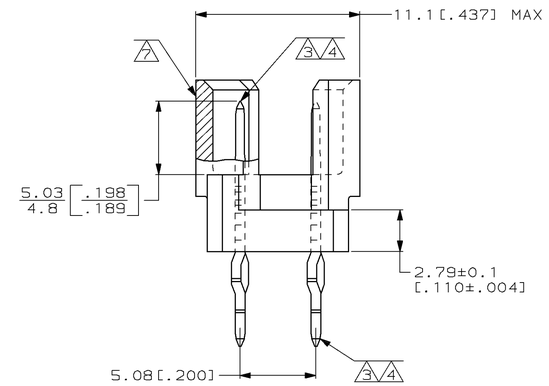

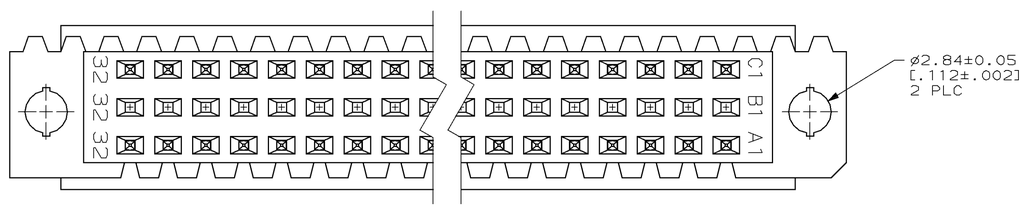

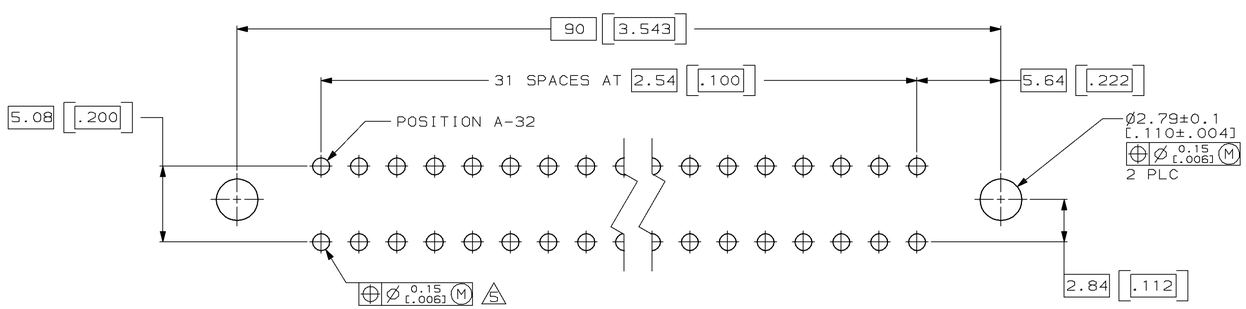

PC BOARD LAYOUT

1. HOUSING MATERIAL: GLASS-FILLED POLYESTER. COLOR: GRAY.
2. POST MATERIAL: PHOSPHOR BRONZE.
3. POST FINISH: DIN 41612 CLASS 3 IN CONTACT AREA. TIN-LEAD PLATE ON POSTS.
4. POST FINISH: DIN 41612 CLASS 2 IN CONTACT AREA. TIN-LEAD PLATE ON POSTS.
5. ACTION PIN POSTS REQUIRE 2.36[.093] MINIMUM THICK PC BOARD. RECOMMENDED PC BOARD HOLES ARE 1.151[.0453] DIA PLATED THROUGH WITH 0.02-0.08[.001-.003] COPPER AND 0.008[.0003] MINIMUM TIN-LEAD PLATING. FINISHED HOLE AFTER PLATING, 0.94-1.09[.037-.043] DIA.
6. PART NUMBER, DATE CODE MARKED THIS APPROXIMATE AREA.
7. MARKING ON THIS SIDE.

NOTES	POSITIONS LOADED	ROWS LOADED C	ROWS LOADED B	ROWS LOADED A	NO. OF LOADED POSITION	ASSY PART NUMBER
OBSOLETE	3 1-32	X	–	X	64	650912-9
	4 1-32	X	–	X	64	650912-5

PART NO

DO NOT SCALE PRINT. UNLESS SPECIFIED DIMENSIONS IN mm [INCHES] TOLERANCES ON : 1 PLC DEC ± - 2 PLC DEC ± 0.13[.005] ANGLES ± -

MATERIAL HOUSING: 1 – POST: 2

FINISH POST: 3 4 -

DR L. BRINER 3/18/91
CHK D.C. RUBENDALL 3/26/91
APPD D.C. RUBENDALL 3/26/91
APPD K.R. PARMER 3/26/91
PRODUCT SPEC –
APPLICATION SPEC –
WEIGHT –

AMP Incorporated Harrisburg, PA 17105-3608

NAME PIN ASSEMBLY, EUROCARD, TYPE "R"

SIZE D | CAGE CODE 00779 | DRAWING NO 650912

SCALE 5:1 | SHEET 1 OF 1

CUSTOMER DRAWING

AMP 1756-3 REV 11-89

Downloaded From Oneyac.com

24-FEB-95 09:16:19 amp20443 /home/sa026a/de

单击下面可查看定价，库存，交付和生命周期等信息

>>TE Connectivity(泰科)

Downloaded From Oneyac.com