THIS DRAWING IS UNPUBLISHED. RELEASED FOR PUBLICATION -,- .
© COPYRIGHT - BY TYCO ELECTRONICS CORPORATION. ALL RIGHTS RESERVED.

LOC	DIST
AD	39

REVISIONS

P	LTR	DESCRIPTION	DATE	DWN	APVD
	N2	ECO-07-016583	11DEC07	MB	JO
	N3	REVISED PER ECO-10-000443	12JAN10	KK	AEG

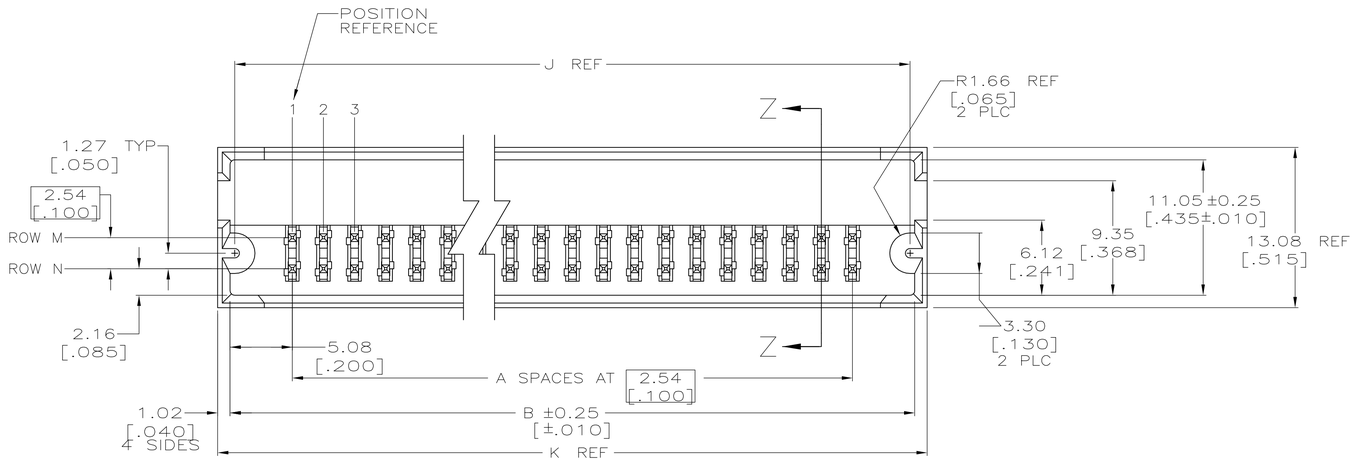

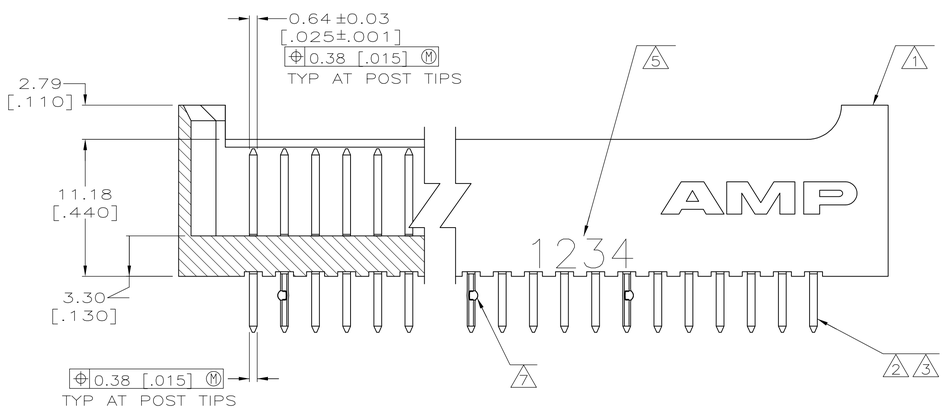

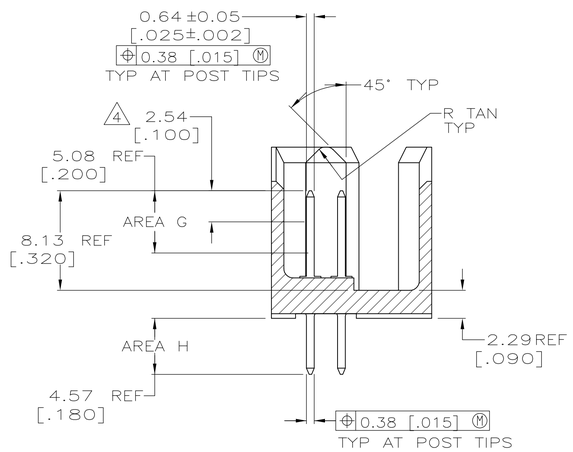

SECTION Z–Z
ROTATED 90° CW

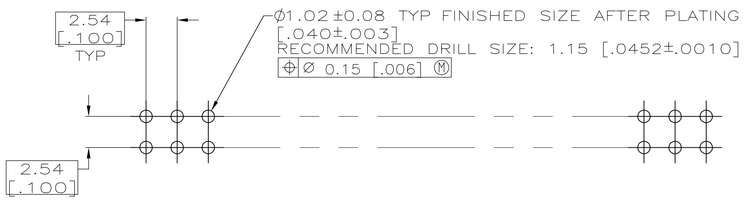

RECOMMENDED MOUNTING HOLE LAYOUT

1. HOUSING: FLAME RETARDANT THERMOPLASTIC; COLOR: BLACK.
2. POST: COPPER ALLOY.
3. POST FINISH: 0.00038 [.000015] GOLD IN AREA G, 0.00254–0.00508 [.000100–.000200] BRIGHT TIN–LEAD IN AREA H, ALL OVER 0.00127 [.000050] NICKEL.
4. POINT OF MEASUREMENT FOR PLATING THICKNESS.
5. RECESSED DATE CODE.
6. CSA LOGO RECESS STAMPED ON HOUSING.
7. BOARD RETENTION FEATURE WHERE INDICATED.
8. POST FINISH: 0.00038 [.000015] GOLD IN AREA G, 0.00254–0.00508 [.000100–.000200] MATTE TIN IN AREA H, ALL OVER 0.00127 [.000050] NICKEL.
9. ROHS 2002/95/EC COMPLIANT
10. OBSOLETE PARTS: OBSOLETE CIS STREAMLINING PER D.RENAUD/D.SINISI

		ROW M	ROW N	K	J	B	A	NO OF POSN	PART NUMBER
10 OBSOLETE		2,23,67,99	2,23,67,99	263.65 [10.380]	260.86 [10.270]	261.62 [10.300]	99	200	9 ~~6-534257-9~~
10 OBSOLETE		1,2,5,6	1,2,5,6	24.89 [.980]	22.10 [.870]	22.86 [.900]	5	12	9 ~~6-534257-8~~
10 OBSOLETE		1,2,6,7,11,12	1,2,6,7,11,12	40.13 [1.580]	37.34 [1.470]	38.10 [1.500]	11	24	9 ~~6-534257-7~~
10 OBSOLETE		1,2,12,13,24,25	1,2,12,13,24,25	73.15 [2.880]	70.36 [2.770]	71.12 [2.800]	24	50	9 ~~6-534257-6~~
		8, 13, 18	8, 13, 18	73.15 [2.880]	70.36 [2.770]	71.12 [2.800]	24	50	9 6-534257-5
10 OBSOLETE		3, 4, 5	3, 4, 5	29.97 [1.180]	27.18 [1.070]	27.94 [1.100]	7	16	9 ~~6-534257-4~~
OBSOLETE		2, 24, 47	2, 24, 47	131.57 [5.180]	128.78 [5.070]	129.54 [5.100]	47	96	9 6-534257-3
10 OBSOLETE		2, 18, 34	2, 18, 34	98.55 [3.880]	95.76 [3.770]	96.52 [3.800]	34	70	9 ~~6-534257-2~~
10 OBSOLETE		2, 15, 29	2, 15, 29	85.85 [3.380]	83.06 [3.270]	83.82 [3.300]	29	60	9 ~~6-534257-1~~
		5, 10, 15	5, 10, 15	60.45 [2.380]	57.66 [2.270]	58.42 [2.300]	19	40	9 6-534257-0
10 OBSOLETE	8	4, 9, 14	4, 9, 14	55.37 [2.180]	52.58 [2.070]	53.34 [2.100]	17	36	9 ~~5-534257-9~~
10 OBSOLETE		3, 8, 13	3, 8, 13	47.75 [1.880]	44.96 [1.770]	45.72 [1.800]	14	30	9 ~~5-534257-8~~
		5, 6, 7	5, 6, 7	40.13 [1.580]	37.34 [1.470]	38.10 [1.500]	11	24	9 5-534257-7
10 OBSOLETE		4, 5, 6	4, 5, 6	35.05 [1.380]	32.26 [1.270]	33.02 [1.300]	9	20	9 ~~5-534257-6~~
		2, 3, 4	2, 3, 4	24.89 [.980]	22.10 [.870]	22.86 [.900]	5	12	9 5-534257-5
OBSOLETE		2, 27, 53, 79	2, 27, 53, 79	212.85 [8.380]	210.06 [8.270]	210.82 [8.300]	79	160	9 5-534257-4
		2, 20, 40, 59	2, 20, 40, 59	162.05 [6.380]	159.26 [6.270]	160.02 [6.300]	59	120	9 5-534257-3
10 OBSOLETE		2, 17, 33, 49	2, 17, 33, 49	136.65 [5.380]	133.86 [5.270]	134.62 [5.300]	49	100	9 ~~5-534257-2~~
10 OBSOLETE		2, 20, 39	2, 20, 39	111.25 [4.380]	108.46 [4.270]	109.22 [4.300]	39	80	9 ~~5-534257-1~~
10 OBSOLETE		2,23,67,99	2,23,67,99	263.65 [10.380]	260.86 [10.270]	261.62 [10.300]	99	200	~~1-534257-9~~
10 OBSOLETE		1,2,5,6	1,2,5,6	24.89 [.980]	22.10 [.870]	22.86 [.900]	5	12	~~1-534257-8~~
10 OBSOLETE		1,2,6,7,11,12	1,2,6,7,11,12	40.13 [1.580]	37.34 [1.470]	38.10 [1.500]	11	24	~~1-534257-7~~
10 OBSOLETE		1,2,12,13,24,25	1,2,12,13,24,25	73.15 [2.880]	70.36 [2.770]	71.12 [2.800]	24	50	~~1-534257-6~~
10 SUPERSEDED BY 6-534257-5		8, 13, 18	8, 13, 18	73.15 [2.880]	70.36 [2.770]	71.12 [2.800]	24	50	~~1-534257-5~~
10 OBSOLETE		3, 4, 5	3, 4, 5	29.97 [1.180]	27.18 [1.070]	27.94 [1.100]	7	16	~~1-534257-4~~
OBSOLETE		2, 24, 47	2, 24, 47	131.57 [5.180]	128.78 [5.070]	129.54 [5.100]	47	96	1-534257-3
		2, 18, 34	2, 18, 34	98.55 [3.880]	95.76 [3.770]	96.52 [3.800]	34	70	1-534257-2
10 OBSOLETE		2, 15, 29	2, 15, 29	85.85 [3.380]	83.06 [3.270]	83.82 [3.300]	29	60	~~1-534257-1~~
		5, 10, 15	5, 10, 15	60.45 [2.380]	57.66 [2.270]	58.42 [2.300]	19	40	1-534257-0
10 OBSOLETE	3	4, 9, 14	4, 9, 14	55.37 [2.180]	52.58 [2.070]	53.34 [2.100]	17	36	~~534257-9~~
10 OBSOLETE		3, 8, 13	3, 8, 13	47.75 [1.880]	44.96 [1.770]	45.72 [1.800]	14	30	~~534257-8~~
		5, 6, 7	5, 6, 7	40.13 [1.580]	37.34 [1.470]	38.10 [1.500]	11	24	534257-7
10 OBSOLETE		4, 5, 6	4, 5, 6	35.05 [1.380]	32.26 [1.270]	33.02 [1.300]	9	20	~~534257-6~~
		2, 3, 4	2, 3, 4	24.89 [.980]	22.10 [.870]	22.86 [.900]	5	12	534257-5
OBSOLETE		2, 27, 53, 79	2, 27, 53, 79	212.85 [8.380]	210.06 [8.270]	210.82 [8.300]	79	160	534257-4
		2, 20, 40, 59	2, 20, 40, 59	162.05 [6.380]	159.26 [6.270]	160.02 [6.300]	59	120	534257-3
10 OBSOLETE		2, 17, 33, 49	2, 17, 33, 49	136.65 [5.380]	133.86 [5.270]	134.62 [5.300]	49	100	~~534257-2~~
10 OBSOLETE		2, 20, 39	2, 20, 39	111.25 [4.380]	108.46 [4.270]	109.22 [4.300]	39	80	~~534257-1~~
	FINISH	BOARD RETENTION LOCATION 7							

THIS DRAWING IS A CONTROLLED DOCUMENT.

DIMENSIONS: INCHES

TOLERANCES UNLESS OTHERWISE SPECIFIED:
0 PLC ± –
1 PLC ± –
2 PLC ± 0.13 [.005]
3 PLC ± –
4 PLC ± –
ANGLES ± –

MATERIAL 1 2

FINISH SEE TABLE

DWN K.L.CLOUSER/UTA 4/8/91
CHK D. SARVER 6/5/92
APVD –
PRODUCT SPEC –
APPLICATION SPEC –
WEIGHT –

Tyco Electronics
Tyco Electronics Corporation
Harrisburg, PA 17105-3608

NAME
HEADER ASSY, MOD II, DOUBLE ROW, 2.54 X 2.54 [.100 X .100] 0.64 [.025] SQUARE POST, BOARD RETENTION FEATURE

SIZE	CAGE CODE	DRAWING NO	RESTRICTED TO
A1	00779	C-534257	–

CUSTOMER DRAWING SCALE 4:1 SHEET 1 OF 1 REV N3

Downloaded From Oneyac.com

单击下面可查看定价，库存，交付和生命周期等信息

>>TE Connectivity(泰科)

Downloaded From Oneyac.com