THIS DRAWING IS UNPUBLISHED. RELEASED FOR PUBLICATION
© COPYRIGHT ALL RIGHTS RESERVED.

LOC	DIST
AA	22

REVISIONS

P	LTR	DESCRIPTION	DATE	DWN	APVD
	A3	REVISED PER ECO-11-005033	20APR11	RK	HMR

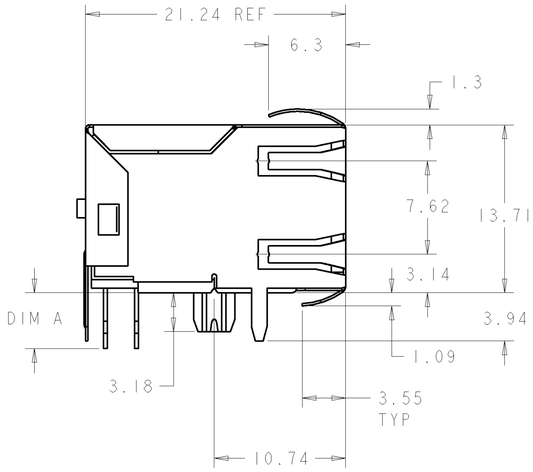

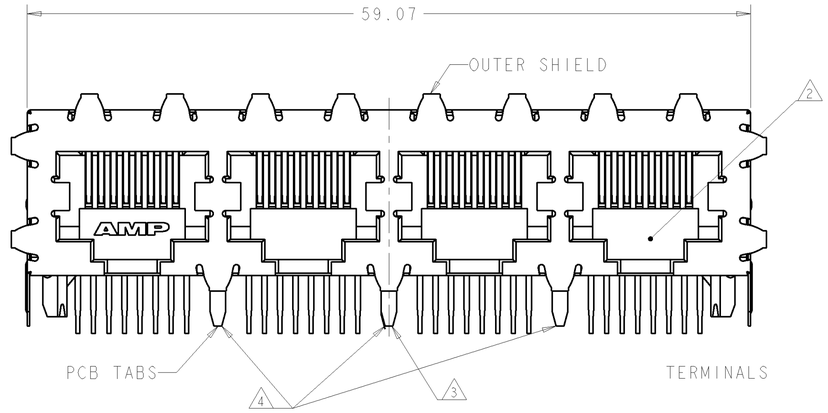

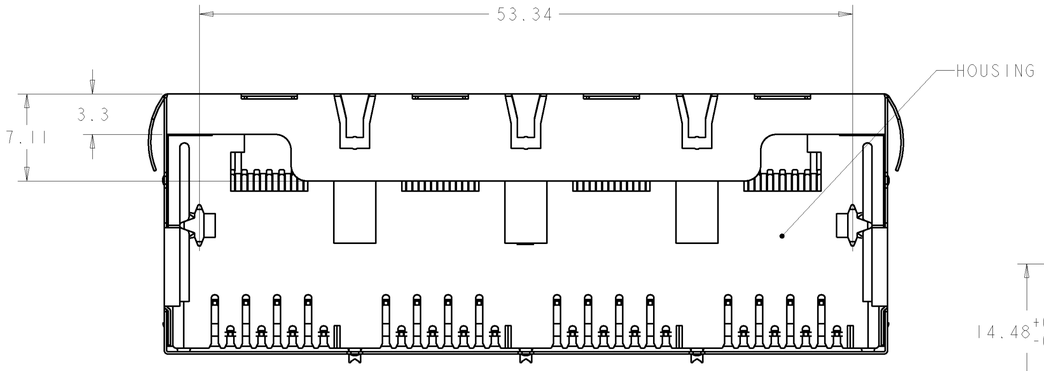

1. MATERIAL: HOUSING - PCT POLYESTER, BLACK, UL 94V-0
   TERMINALS: 0.305 THICK PHOS BRONZE PLATED WITH .0013mm MINIMUM THICK HARD GOLD IN LOCALIZED AREA AND .002mm MINIMUM THICK MATTE TIN IN SOLDER AREA OVER .0013mm MINIMUM THICK NICKEL UNDERPLATE
   SHIELD - .196 THICK COPPER ALLOY PLATED WITH .0013mm MINIMUM NICKEL AND .002mm MINIMUM HOT TIN DIP ON PCB GROUND TABS

2. JACK CAVITY CONFORMS TO FCC RULES AND REGULATIONS, PART 68 SUBPART F

3. PCB HOLES/TABS USED FOR -3

4. PCB HOLES/TABS USED FOR -2 AND -4

5. USE #30 DRILL BIT OR 3.25mm DRILL BIT WHEN PRODUCING THESE PCB HOLES

6. RECOMMENDED APPLICATIONS: FAST ETHERNET, 10 BASE-T ETHERNET, AND 10/100 BASE-T ETHERNET (CAT 5 TWO PAIR 1/2, 3/6)

7. OBSOLETE PARTS: OBSOLETE CIS STREAMLINING PER D.RENAUD/D.SINISI

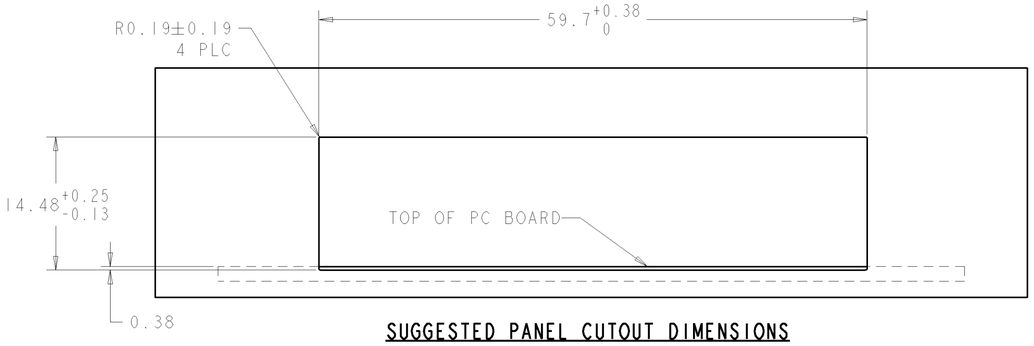

SUGGESTED PANEL CUTOUT DIMENSIONS

SCALE 3:1

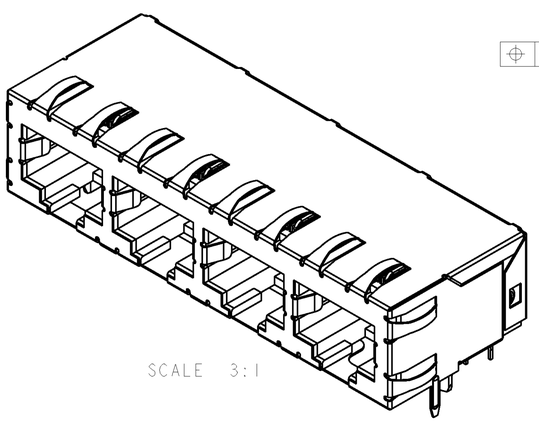

SCALE 3:1

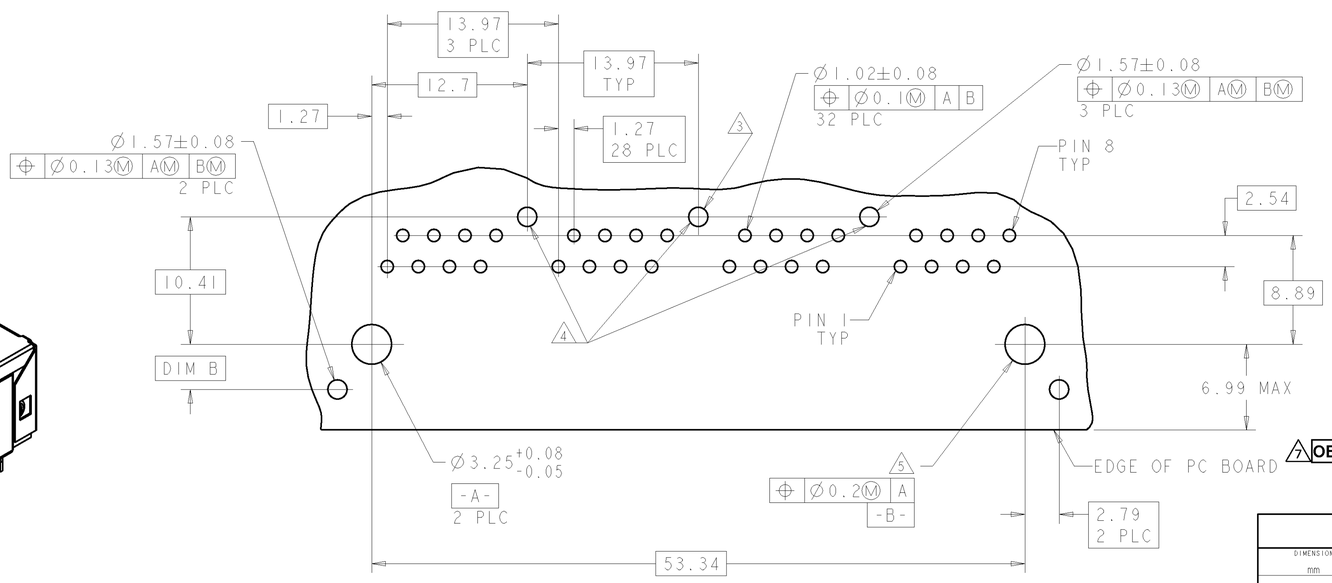

PC BOARD VIEWED FROM COMPONENT SIDE OF BOARD

SCALE 4:1

3.68	3	3.56	6339167-4
4.57	1	3.56	6339167-3
4.57	3	3.56	6339167-2
4.57	0	3.05	~~6339167-1~~
DIM B	NUMBER OF REAR PCB TABS	DIM A	PART NO.

7 OBSOLETE

DIMENSIONS: mm	TOLERANCES UNLESS OTHERWISE SPECIFIED: 0 PLC ± / 1 PLC ± / 2 PLC ±.25 / 3 PLC ± / 4 PLC ± / ANGLES ±	DWN 09MAY2005 S. SCHOLL/L. A. MAYER; CHK 09MAY2005 J. WESTMAN; APVD 09MAY2005 S. FLICKINGER	TE Connectivity
MATERIAL SEE NOTE 1	FINISH SEE NOTE 1	PRODUCT SPEC 108-1163-9; APPLICATION SPEC 114-2048; WEIGHT -	NAME ASSEMBLY, MULTI-PORT, 1X4, 8 POSITION, SHIELDED, WAVE PANEL GROUND
			SIZE A1; CAGE CODE 00779; DRAWING NO C-6339167; RESTRICTED TO -
			CUSTOMER DRAWING; SCALE 4:1; SHEET 1 OF 1; REV A3

Downloaded From Oneyac.com

单击下面可查看定价，库存，交付和生命周期等信息

>>TE Connectivity(泰科)

Downloaded From Oneyac.com