THIS DRAWING IS UNPUBLISHED. RELEASED FOR PUBLICATION
© COPYRIGHT BY TYCO ELECTRONICS CORPORATION. ALL RIGHTS RESERVED.

LOC	DIST
J	

REVISIONS 変更

P	LTR	DESCRIPTION	DATE	DWN	APVD
	E	REVISED FJB0-0166-03	11MAR03	H.H	T.K

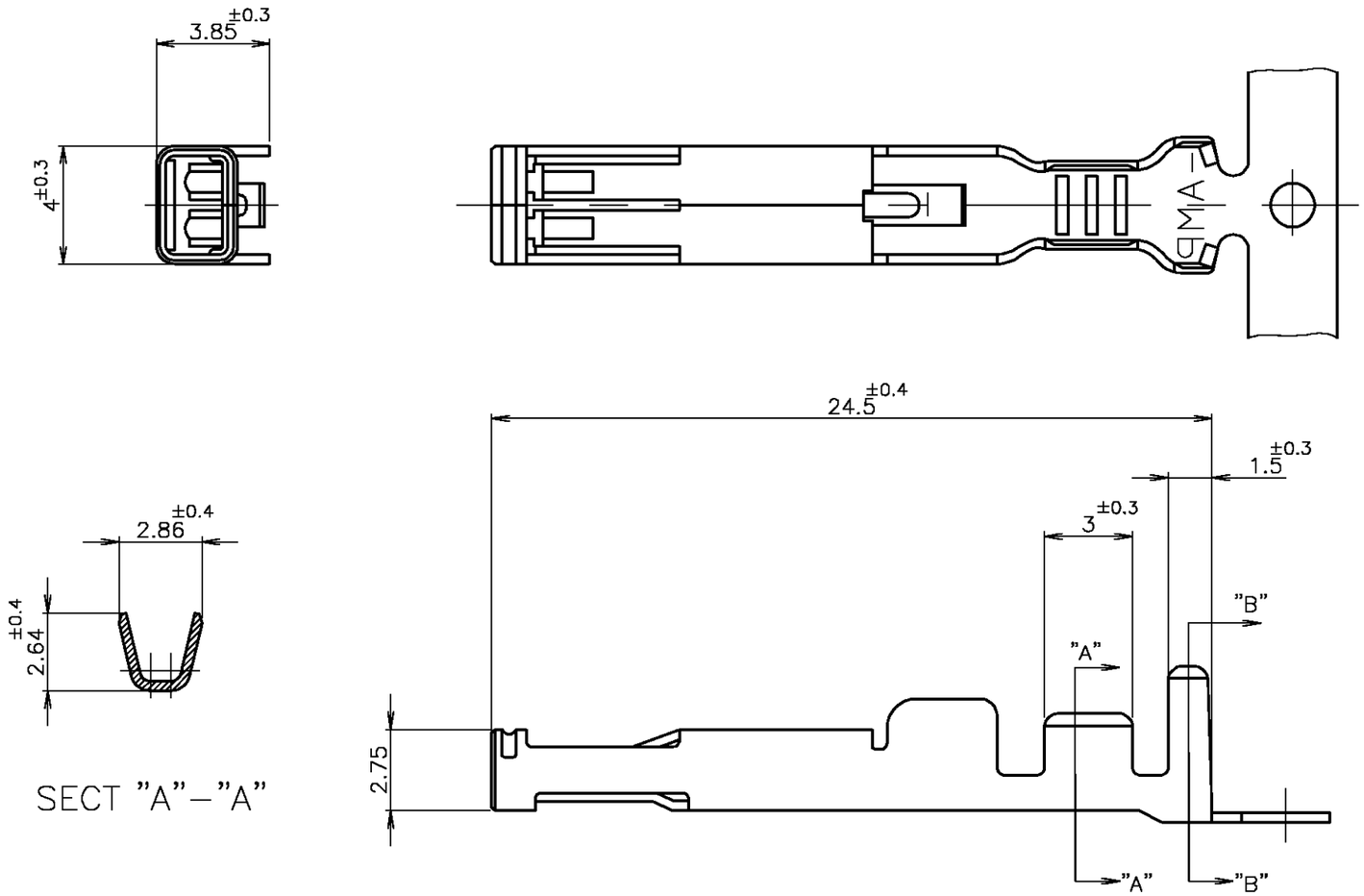

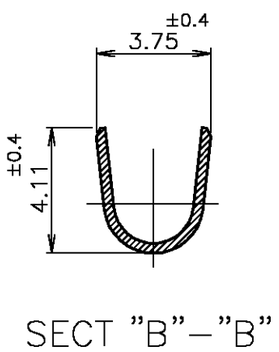

注記

1. 材料： 銅合金
2. 仕上げ：材料めっき
   全面ニッケル下地めっきの上に
   接触部：金めっき
   圧着部：半田めっき
3. 仕上げ： 全面錫メッキ
4. 仕上げ：材料めっき
   全面ニッケル下地めっきの上に
   接触部：金めっき
   圧着部：錫めっき
5. 使用コネクタ型番：X-316456-X,X-353369-X
   ：X-353463-X
6. 一般公差
   10以下：±0.2
   10を越え30以下：±0.25
   30を越え100以下：±0.3
   角度：±3°

NOTES;

1. MATERIAL : COPRER ALLOY.
2. FINISH : PRE-PLATED
   NICKEL PL ALL OVER
   CONTACT AREA : GOLD PL.
   BAREL AREA : TIN-LEAD PL.
3. FINISH : TIN PL ALL OVER.
4. FINISH : PRE-PLATED
   NICKEL PL ALL OVER
   CONTACT AREA : GOLD PL.
   BARREL AREA : TIN PL.
5. USED CONNECTOR P/N : X-316456-X,X-353369-X
   : X-353463-X
6. GENERAL TOLERANCE
   10≥ : ±0.2
   30≥ >10: ±0.25
   100≥ >30: ±0.3
   ANGLES: ±3°

4	316458-4
3	1-316458-2
2	316458-2
仕上 FINISH	P/N

WIRE RANGE 適合電線断面積	INSULATION DIA 被覆外径
0.5~1.25mm²(AWG16~20)	ø1.85~2.8 mm

THIS DRAWING IS A CONTROLLED DOCUMENT.

DIMENSIONS: 単位： 粍 MM

TOLERANCES UNLESS OTHERWISE SPECIFIED: 一般公差

0 PLC	±	6
1 PLC	±	
2 PLC	±	
3 PLC	±	
4 PLC	±	
ANGLES	±	

MATERIAL 材料 1

FINISH 仕上 2 3 4

DWN	K.IINO	28OCT98
CHK	J.TANIGAWA	28OCT98
APVD	S.KUBOUCHI	28OCT98
PRODUCT SPEC 製品規格		
APPLICATION SPEC 取付適用規格	114-5182	
WEIGHT		

CUSTOMER DRAWING

tyco Electronics — Tyco Electronics AMP K.K. Kawasaki,Japan

NAME 名称: RECEPTACLE GND CONTACT HYBRID SF DRAWER CONNECTOR

SIZE	CAGE CODE	DRAWING NO 番号	RESTRICTED TO
A3	00779	C-316458	—

SCALE 尺度 1:1 SHEET 1 OF 1 REV E

AMP 1470-19 REV 31MAR2000

10MAR2003 3:09pm FJ033815

Downloaded From Oneyac.com

单击下面可查看定价，库存，交付和生命周期等信息

>>TE Connectivity(泰科)

Downloaded From Oneyac.com