THIS DRAWING IS UNPUBLISHED. RELEASED FOR PUBLICATION -,- .
© COPYRIGHT - BY TYCO ELECTRONICS CORPORATION. ALL RIGHTS RESERVED.

LOC	DIST
H	—

REVISIONS

P	LTR	DESCRIPTION	DATE	DWN	APVD
	N	ECR-15-004302	23MAR2015	F.L	F.Y

CONNECTOR ASSEMBLY

EXEMPLARY LOADED

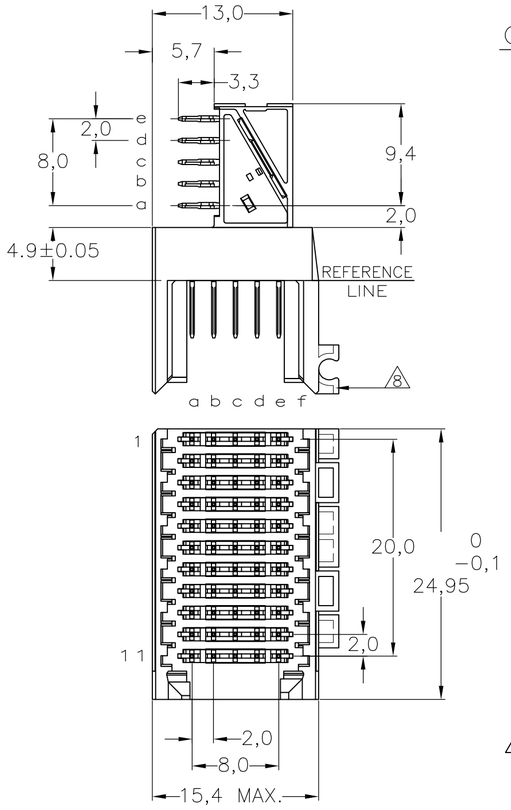

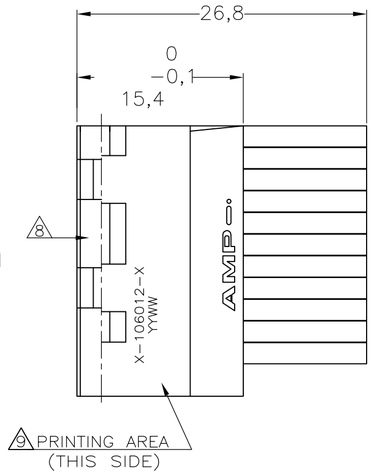

CONTACT DIMENSIONS

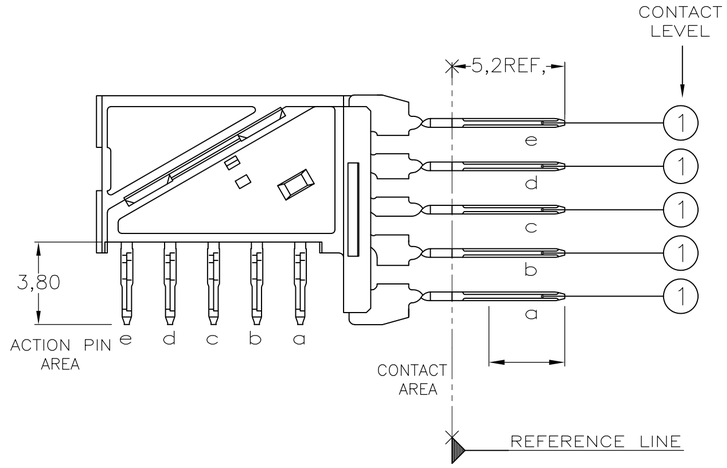

RECOMMENDED PCB-HOLE LAY-OUT

COMPONENT SIDE SHOWN

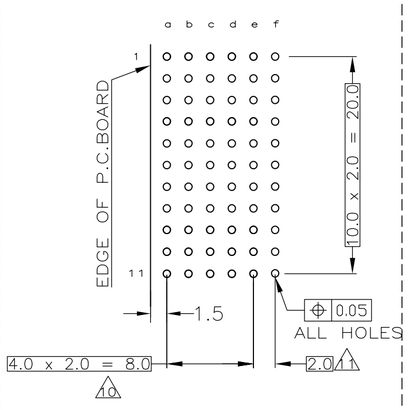

CONTACT LAYOUT

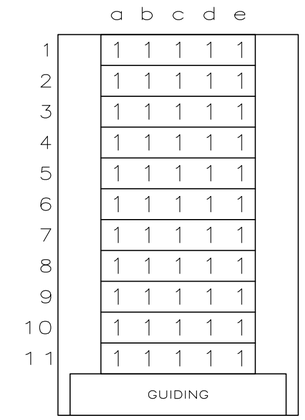

P.C.B. HOLE DIM. ACTION PIN
FOR DETAILS SEE
APPLICATION SPECIFICATION

NOTES:

1 MATERIAL HOUSING : GREY GLASSFILLED POLYESTER UL-RATING V0
CONTACT : PHOSPHORBRONZE

2 GENERAL PLATING SPECIFICATION: UNDERPLATING (ENTIRE CONTACT): 1,27µm NICKEL MIN. AND ACTION PIN: 0,5µm TIN-LEAD MIN. FOR PLATING OF MATING SURFACES SEE APPLICABLE SPECIFICATION REFERENCE FOR EACH DASH NUMBER.

3 CONFORMS TO ALL TESTING ACCORDING IEC 61076-4-101 PERFORMANCE LEVEL 2.

4 CONFORMS TO ALL TESTING ACCORDING IEC 61076-4-101 PERFORMANCE LEVEL 1.

5 CONNECTOR TESTED AND QUALIFIED AGAINST TELCORDIA GR-1217-CORE QUALITY LEVEL III, CENTRAL OFFICE APPLICATIONS.

6 CONNECTOR TESTED AND QUALIFIED AGAINST TELCORDIA GR-1217-CORE QUALITY LEVEL III, UNCONTROLLED ENVIRONMENT APPLICATIONS.

7 CONNECTOR LUBRICATED WITH TELCORDIA GR-1217-CORE APPROVED LUBRICANT.

8 CONNECTOR ASSEMBLY WITH LATCH HINGE FOR CABLE CONNECTOR.

9 CONNECTOR MARKED WITH PARTNUMBER AND DATECODE

10 PLATED-THROUGH HOLES AT 2x2mm SQUARE GRID.

11 HOLES IN ROW f FOR POSSIBLE FUTURE USE OF GROUND RETURN SHIELDS. (NOT YET TOOLED)

12 OBSOLETE PARTS: OBSOLETE CIS STREAMLINING PER D.RENAUD/D.SINISI

13 0.76um MIN. GOLD PLATING AT MATING SURFACE

14 1.27um MIN. GOLD PLATING AT MATING SURFACE

	CONSERVATION TREATMENT		MATERIAL	PARTNUMBER
	N		2 4 14	5-106012-0
	N		2 3 13	3-106012-0
12 OBSOLETE	Y	7	2 6	1-106012-9
	N		2 3	1-106012-1 8
	Y	7	2 5	106012-9
12 OBSOLETE	N		2 4	106012-4
	N		2 3	106012-1

THIS DRAWING IS A CONTROLLED DOCUMENT.

DIMENSIONS: MM

TOLERANCES UNLESS OTHERWISE SPECIFIED:
0 PLC ± -
1 PLC ± -
2 PLC ± -
3 PLC ± -
4 PLC ± -
ANGLES ± -

MATERIAL -
FINISH -

DWN L.v.d.HEIJDEN 15DEC97
CHK D. TRUREN 15DEC97
APVD F.v.KONINGSBRUGGE -
PRODUCT SPEC
APPLICATION SPEC 114-19029
WEIGHT -

Tyco Electronics
Tyco Electronics Corporation
s-HertogenBosch,Netherlands,

NAME
Z-PACK 2MM HM TYPE C
55 POS. RIGHT ANGLE MALE
CONNECTOR ASSEMBLY

SIZE	CAGE CODE	DRAWING NO	RESTRICTED TO
A2	00779	C-106012	—

CUSTOMER DRAWING | SCALE NTS | SHEET 1 OF 1 | REV N

106012

Downloaded From Oneyac.com

单击下面可查看定价，库存，交付和生命周期等信息

>>TE Connectivity(泰科)

Downloaded From Oneyac.com