DRAWING MADE IN THIRD ANGLE PROJECTION

© COPYRIGHT 1975-83 BY AMP INCORPORATED, HARRISBURG, PA. ALL INTERNATIONAL RIGHTS RESERVED. AMP INCORPORATED PRODUCTS COVERED BY U. S. AND FOREIGN PATENTS AND/OR PATENTS PENDING.

LOC AD | DIST 39

REVISIONS

| P | F | ZONE | LTR | DESCRIPTION | DATE | APPROVED |
|---|---|---|---|---|---|---|
| | | | G | REV PER 0310-0025-98 | 04OCT01 | JO |
| | | | G1 | REVISED PER ECO-09-026346 | NOV09 | AEG |

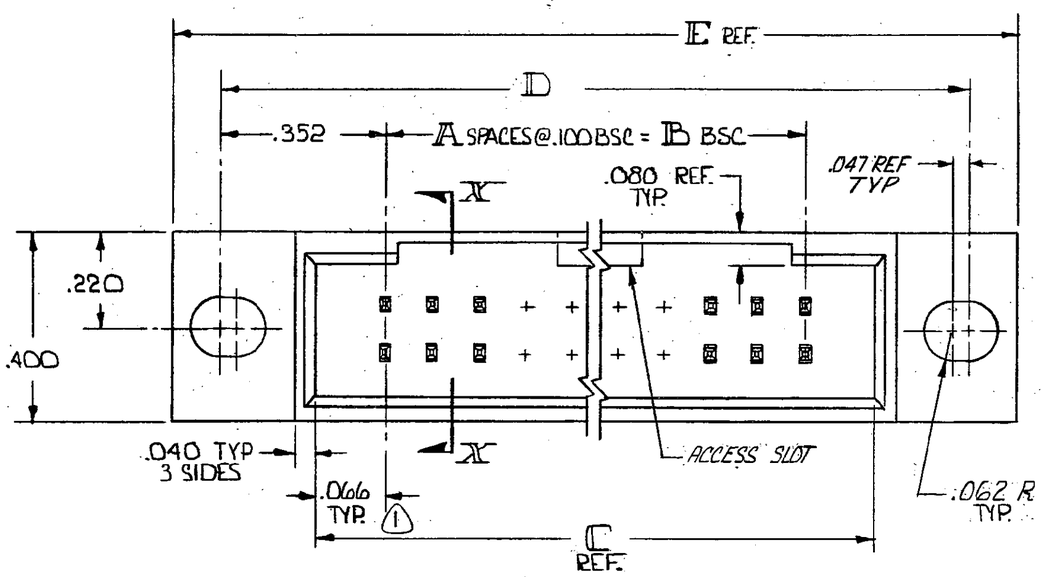


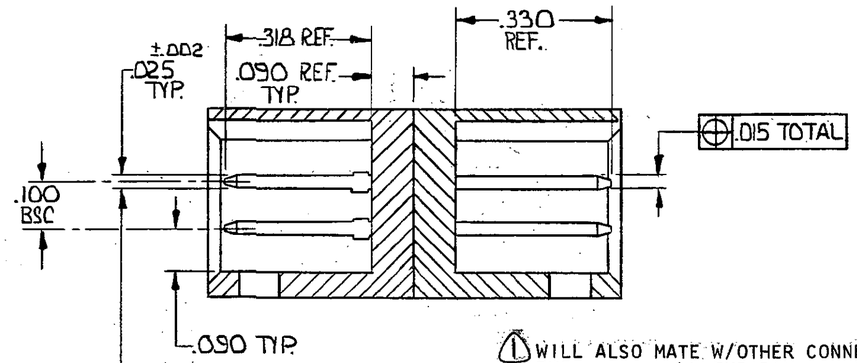


SECTION X-X

1 WILL ALSO MATE W/OTHER CONNECTORS WHICH ARE COMPATIBLE WITH THE .066 END DIM.

2 OBSOLETE PART NUMBER

3 OBSOLETE PARTS: OBSOLETE CIS STREAMLINING PER D.RENAUD/D.SINISI

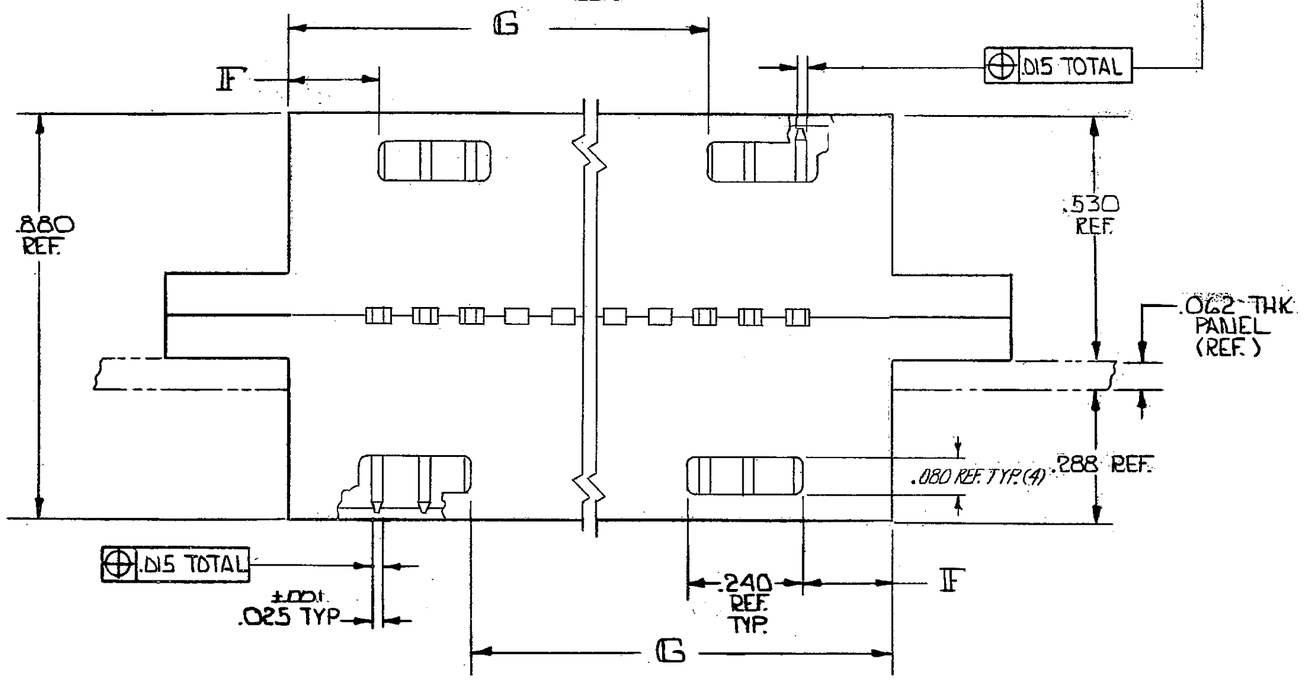


| | H | G | F | E | D | C | B | A | NO. OF POS. | PART NO |
|---|---|---|---|---|---|---|---|---|---|---|
| 3 OBSOLETE | 3.132 | 2.806 | .106 | 3.804 | 3.604 | 3.032 | 2.900 | 29 | 60 | ~~2-87608-6~~ |
| | 3.032 | 2.706 | | 3.704 | 3.504 | 2.932 | 2.800 | 28 | 58 | 2- 2 -5 |
| | 2.932 | 2.606 | | 3.604 | 3.404 | 2.832 | 2.700 | 27 | 56 | 2- 2 -4 |
| | 2.832 | 2.506 | | 3.504 | 3.304 | 2.732 | 2.600 | 26 | 54 | 2- 2 -3 |
| | 2.732 | 2.406 | | 3.404 | 3.204 | 2.632 | 2.500 | 25 | 52 | 2- 2 -2 |
| | 2.632 | 2.306 | | 3.304 | 3.104 | 2.532 | 2.400 | 24 | 50 | 2- -1 |
| | 2.532 | 2.206 | | 3.204 | 3.004 | 2.432 | 2.300 | 23 | 48 | 1- 2 -0 |
| | 2.432 | 2.106 | | 3.104 | 2.904 | 2.332 | 2.200 | 22 | 46 | 1- 2 -9 |
| | 2.332 | 2.006 | | 3.004 | 2.804 | 2.232 | 2.100 | 21 | 44 | 1- 2 -8 |
| | 2.232 | 1.906 | | 2.904 | 2.704 | 2.132 | 2.000 | 20 | 42 | 1- 2 -7 |
| | 2.132 | 1.806 | | 2.804 | 2.604 | 2.032 | 1.900 | 19 | 40 | 1- -6 |
| | 2.032 | 1.706 | | 2.704 | 2.504 | 1.932 | 1.800 | 18 | 38 | 1- 2 -5 |
| | 1.932 | 1.606 | | 2.604 | 2.404 | 1.832 | 1.700 | 17 | 36 | 1- 2 -4 |
| | 1.832 | 1.506 | | 2.504 | 2.304 | 1.732 | 1.600 | 16 | 34 | 1- -3 |
| | 1.732 | 1.406 | | 2.404 | 2.204 | 1.632 | 1.500 | 15 | 32 | 1- 2 -2 |
| | 1.632 | 1.306 | | 2.304 | 2.104 | 1.532 | 1.400 | 14 | 30 | 1- 2 -1 |
| | 1.532 | 1.206 | | 2.204 | 2.004 | 1.432 | 1.300 | 13 | 28 | 1- 2 -0 |
| OBSOLETE 3 | 1.432 | 1.106 | | 2.104 | 1.904 | 1.332 | 1.200 | 12 | 26 | ~~-9~~ |
| | 1.332 | 1.006 | | 2.004 | 1.804 | 1.232 | 1.100 | 11 | 24 | ~~-8~~ |
| | 1.232 | .906 | | 1.904 | 1.704 | 1.132 | 1.000 | 10 | 22 | 2 -7 |
| | 1.132 | .806 | .106 | 1.804 | 1.604 | 1.032 | .900 | 9 | 20 | -6 |
| | 1.032 | — | .406 | 1.704 | 1.504 | .932 | .800 | 8 | 18 | -5 |
| | .932 | — | .306 | 1.604 | 1.404 | .832 | .700 | 7 | 16 | 2 -4 |
| | .832 | — | .306 | 1.504 | 1.304 | .732 | .600 | 6 | 14 | 2 -3 |
| | .732 | — | .206 | 1.404 | 1.204 | .632 | .500 | 5 | 12 | -2 |
| | .632 | — | .206 | 1.304 | 1.104 | .532 | .400 | 4 | 10 | 87608 -1 |

87608

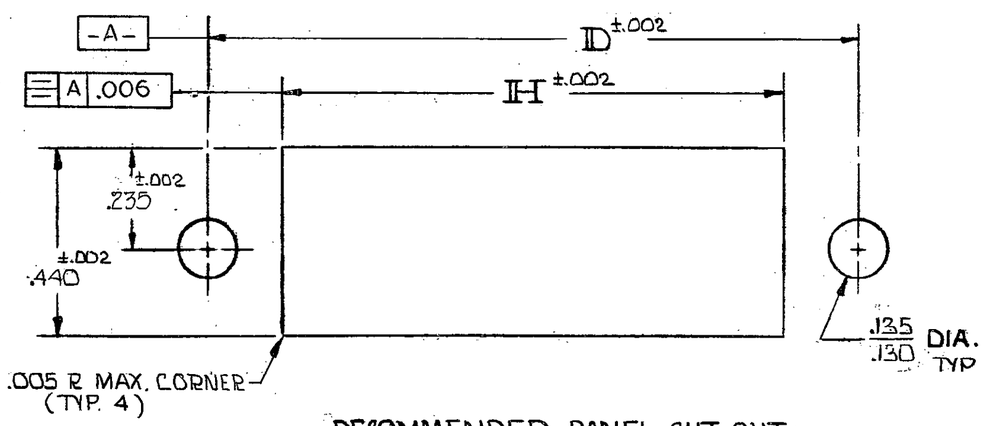


RECOMMENDED PANEL CUT-OUT

UNLESS OTHERWISE SPECIFIED DIMENSIONS ARE IN INCHES.
TOLERANCES ON:
DECIMALS ±.005
ANGLES ±

MATERIAL
HSG'S. - GLASS FILLED NYLON
COLOR: BLACK
CONTACT - PHOS BRONZE

FINISH
CONTACT - .000030 GOLD OVER .000050 NICKEL

CONTRACT NO

DR 9/18/75
CHK 9-18-75
APPD 9/22/75
APPD 9/22/75
DSGN APPD
OTHER APPD

AMP INCORPORATED Harrisburg, Pa.

NAME
HEADER ASS'Y., MOD II, .100 x .100 CENTERS, MTG. EARS, W/ PIN PROTECTORS BOTH SIDES
MATES W/ MOD IV (BOTH SIDES) 1

| SIZE | CODE IDENT NO | DRAWING NO |
|---|---|---|
| C | 00779 | 87608 |

SCALE — SHEET 1 of 1

CUSTOMER DRAWING

AMP 1871-6 (7-75)

Downloaded From Oneyac.com

单击下面可查看定价，库存，交付和生命周期等信息

>>TE Connectivity(泰科)

Downloaded From Oneyac.com