THIS DRAWING IS UNPUBLISHED. RELEASED FOR PUBLICATION 20
© COPYRIGHT 20 BY - ALL RIGHTS RESERVED.

REVISIONS

P	LTR	DESCRIPTION	DATE	DWN	APVD
	A	INITIAL RELEASE	14APR2015	DL	CW
	B	ECR-15-018481	22FEB2016	DL	CW
	C	ECR-21-111798	09SEP2021	WQR	CW

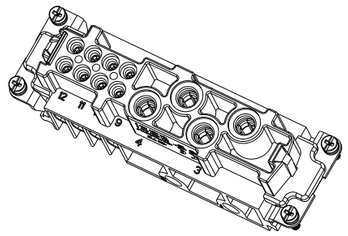

SCALE 1:2

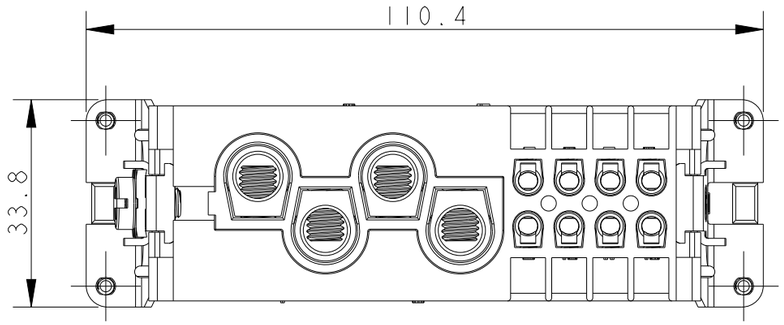

M5 THREAD
RECOMMENDED TIGHTENING TORQUE 2.0Nm

4 X M3 THREAD
RECOMMENDED TIGHTENING TORQUE 0.5Nm

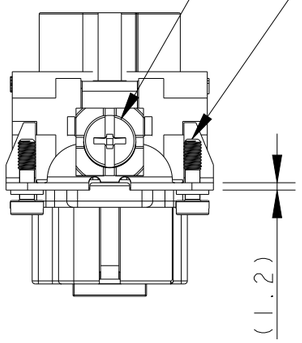

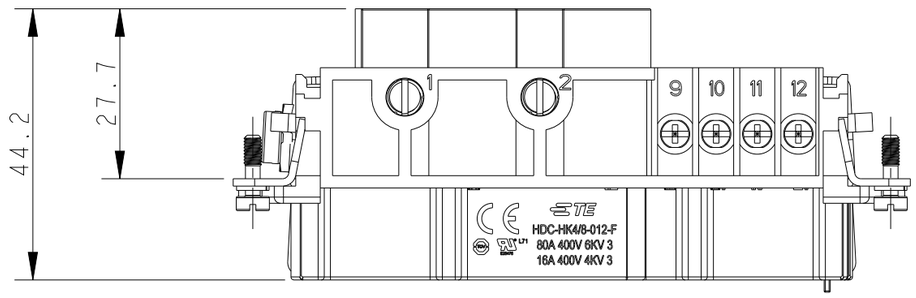

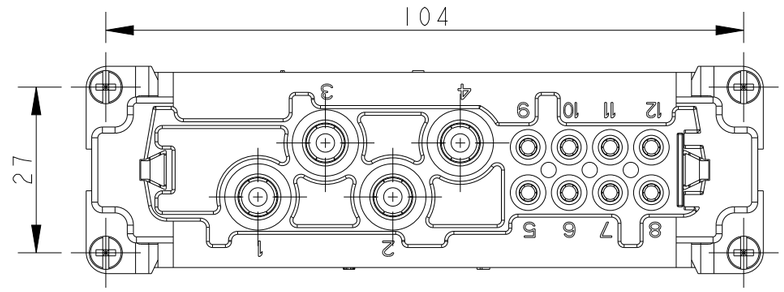

NOTES:
1. TECHNICAL CHARACTERISTICS:
   INSULATION MATERIAL: PC
   RATED VOLTAGE: POWER: 400 V; SIGNAL: 400 V
   RATED CURRENT: POWER: 80 A; SIGNAL: 16 A
   INSULATION RESISTANCE: >=400MΩ
   RATED IMPULSE VOLTAGE: POWER: 6 KV; SIGNAL: 4 KV
   POLLUTION DEGREE: 3
   FLAMMABILITY: UL94V-0
   MATING CYCLES: 500
   OPERATION TEMPERATURE: -40-+125°C
   WIRE RANGE: POWER: 1.5-16 mm² (16-5 AWG)
   SIGNAL: 0.5-2.5 mm² (20-14 AWG)
   CONTACT FINISH: SILVER PLATED
   CONTACT TYPE: SCREW CONTACT

注释：
1. 技术参数：
   绝缘材料： PC
   额定电压： 电源： 400V； 信号：400V
   额定电流： 电源： 80A； 信号： 16A
   绝缘电阻： >=400MΩ
   额定脉冲电压： 电源： 6 KV； 信号： 4 KV
   污染等级： 3
   阻燃等级： UL94V-0
   插拔次数： 500次
   工作温度： -40-+125°C
   接线范围： 电源： 1.5-16 mm² (16-5 AWG)
   信号： 0.5-2.5 mm² (20-14 AWG)
   端子表面处理：镀银
   接线类型： 螺丝压接

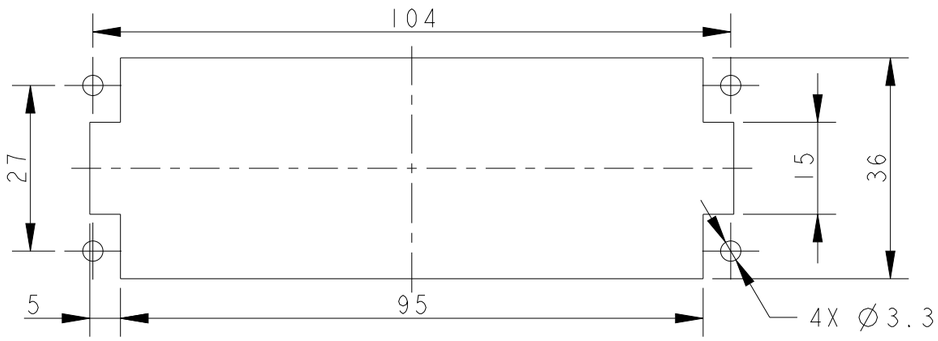

PANEL CUT OUT FOR INSERTS FOR USING
WITHOUT HOODS/HOUSINGS

T2100122201-000	HK4/8-012-F HK4/8-012 母插
PART NUMBER 料 号	PART DESCRIPTION 描 述

THIS DRAWING IS A CONTROLLED DOCUMENT.

DIMENSIONS: mm

TOLERANCES UNLESS OTHERWISE SPECIFIED:
0 PLC ±-
1 PLC ±-
2 PLC ±-
3 PLC ±-
4 PLC ±-
ANGLES ±-

MATERIAL - -
FINISH - -

DWN DAVID LI 14APR2015
CHK CHRIS WANG 14APR2015
APVD XU XIANG 14APR2015
PRODUCT SPEC 108-137129
APPLICATION SPEC 114-137129
WEIGHT -

TE Connectivity

NAME HK4/8-012-F

SIZE A3 | CAGE CODE - | DRAWING NO C-T2100122201000 | RESTRICTED TO

CUSTOMER DRAWING | SCALE 1:1 | SHEET 1 OF 1 | REV C

1470-19 (3/13)

Downloaded From Oneyac.com

单击下面可查看定价，库存，交付和生命周期等信息

>>TE Connectivity(泰科)

Downloaded From Oneyac.com