THIS DRAWING IS UNPUBLISHED. RELEASED FOR PUBLICATION -.-.
© COPYRIGHT - BY TYCO ELECTRONICS CORPORATION. ALL RIGHTS RESERVED.

| LOC | DIST |
|---|---|
| AA | 00 |

REVISIONS

| P | LTR | DESCRIPTION | DATE | DWN | APVD |
|---|---|---|---|---|---|
| | B | REVISED ECR-08-020098 | 11AUG2008 | AL | SY |

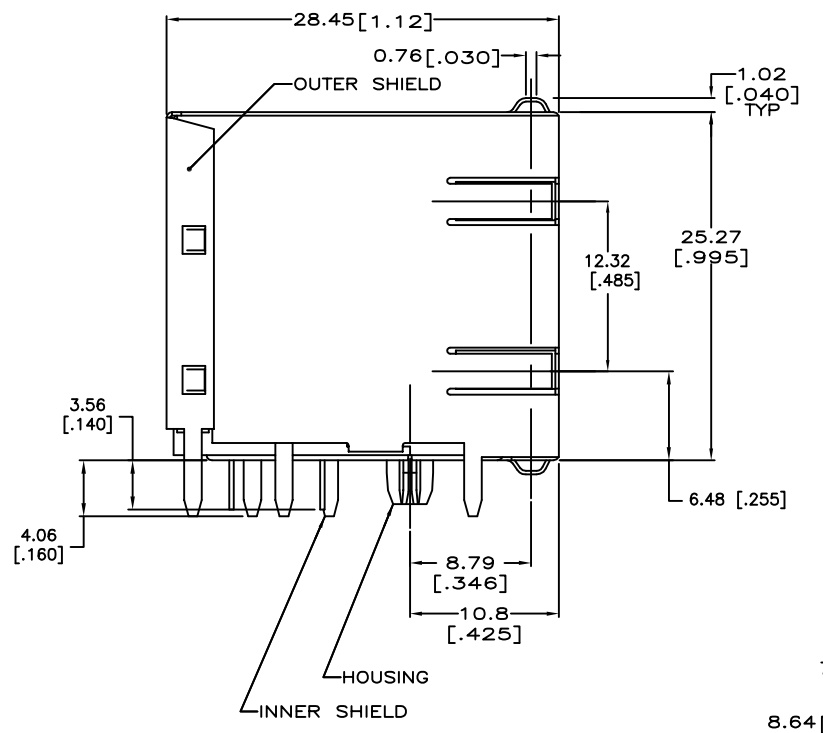


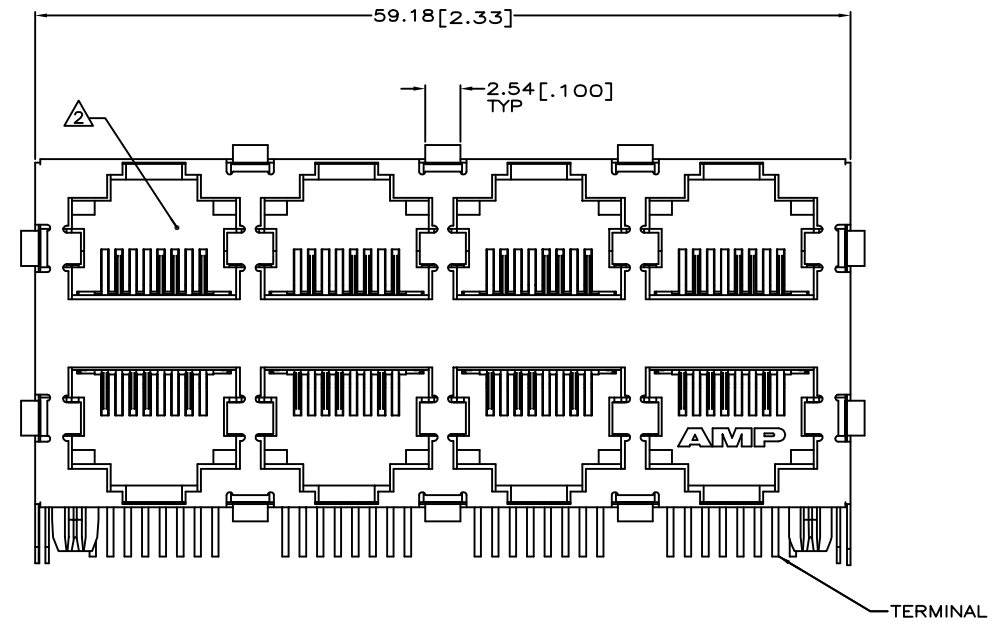


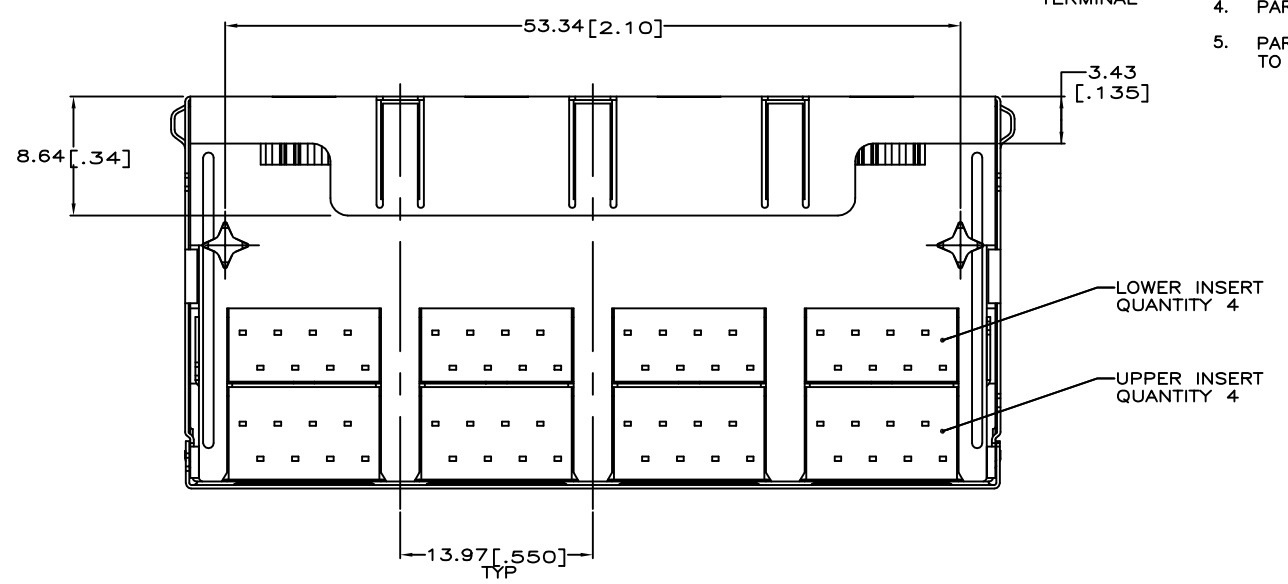


1. MATERIAL:
HOUSING – PCT POLYESTER, BLACK, UL94V–0.
OVERMOLDED TERMINAL ARRAY – HIGH TEMPERATURE NYLON, COLOR: NATURAL
TERMINALS – 0.33 [.013] THICK PHOS BRONZE PLATED WITH 1.27um [.000050] MIN THICK HARD GOLD IN LOCALIZED AREA AND 3.81um [.000150] MIN THICK MATTE TIN IN SOLDER AREA OVER 1.27um [.000050] MIN THICK NICKEL UNDERPLATE.
INNER SHIELD – 0.25 [.010] THICK COPPER ALLOY PLATED WITH 2.03um [.000080] MIN BRIGHT TIN OVER 1.27um [.000050] MIN NICKEL.
OUTER SHELL – 0.25[.010] THICK COPPER ALLOY PLATED WITH 1.27um[.000050] MIN NICKEL. PCB GROUND TABS DIPPED WITH 2.03um[.000080] MIN TIN

2. JACK CAVITY CONFORMS TO FCC RULES AND REGULATIONS, PART 68 SUBPART F.

3. DATE CODE LOCATED ON REAR OF PART APPROXIMATELY AS SHOWN:
FIRST 2 DIGITS ARE LAST 2 DIGITS OF YEAR,
SECOND 2 DIGITS ARE MANUFACTURING WORK WEEK,
LAST DIGIT IS DAY OF WEEK, WITH SUNDAY = 1.

4. PARTS PACKAGED IN SEALED BAGS WITH DESICCANT

5. PARTS SUITABLE FOR LEAD FREE REFLOW PROCESSING TO 260° C

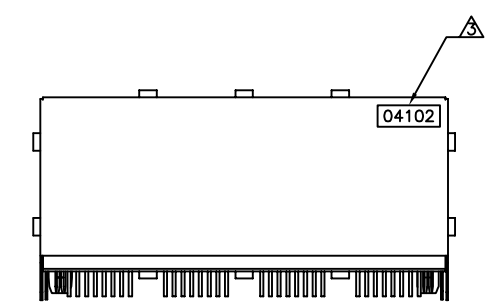


BACK VIEW
SCALE 2:1

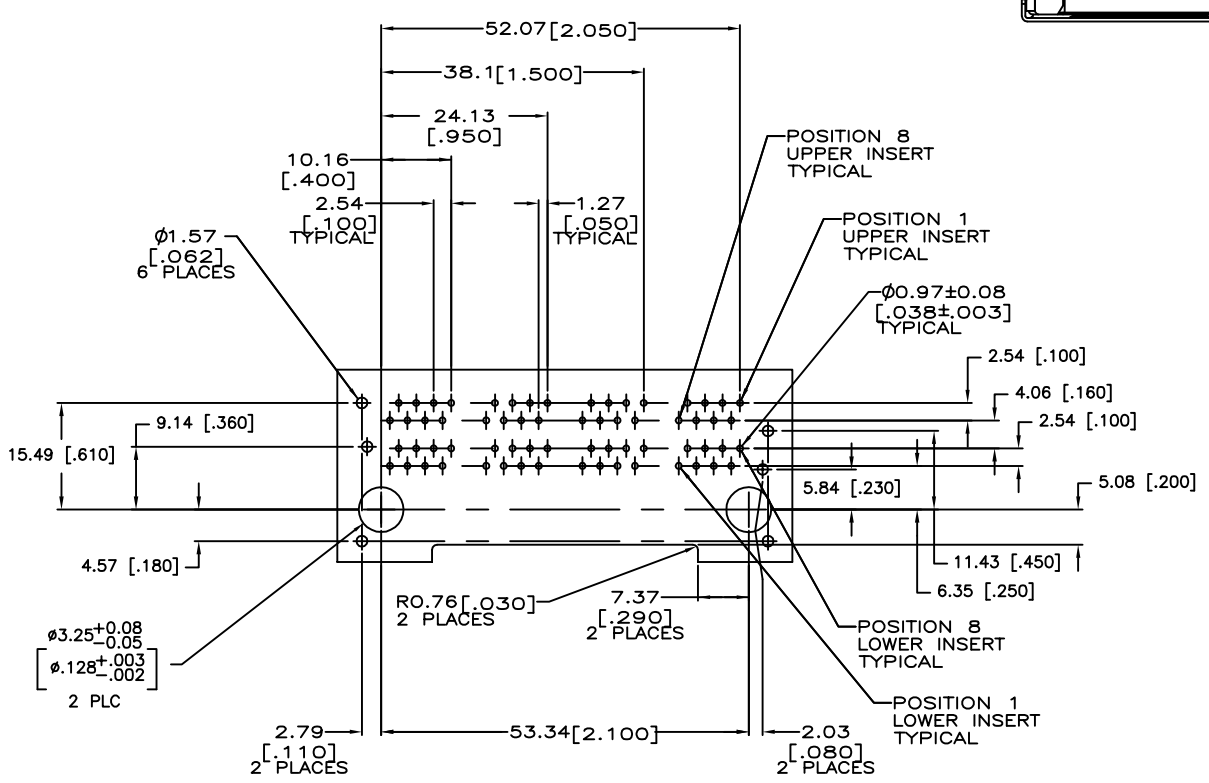


PC BOARD LAYOUT VIEWED FROM COMPONENT SIDE
SCALE 2:1

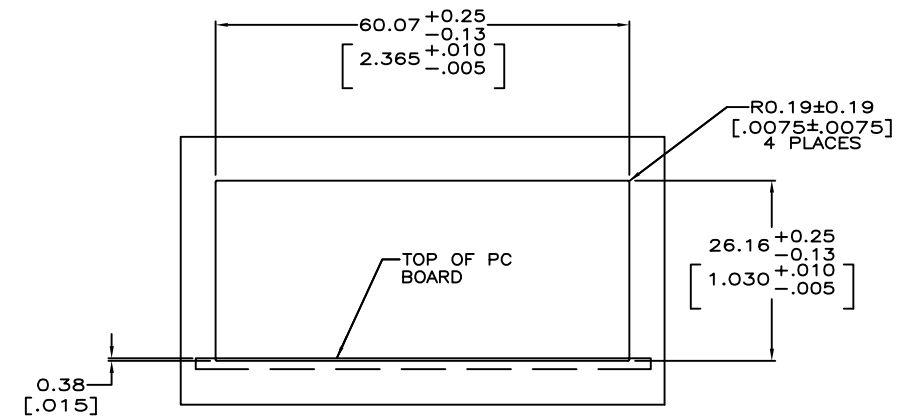


SUGGESTED PANEL CUTOUT DIMENSIONS
SCALE 2:1

2007105–1
PART NUMBER

THIS DRAWING IS A CONTROLLED DOCUMENT.

DIMENSIONS: mm [INCHES]

TOLERANCES UNLESS OTHERWISE SPECIFIED:
0 PLC ± –
1 PLC ± –
2 PLC ± 0.25[.01]
3 PLC ± 0.13[.005]
4 PLC ± –
ANGLES ± –

MATERIAL: SEE NOTE 1
FINISH: SEE NOTE 1

DWN: T. SPRINKLE/L.A.MAYER 12SEPT2007
CHK: J.WESTMAN 12SEPT2007
APVD: S.FLICKINGER 12SEPT2007
PRODUCT SPEC: 108–1163–2
APPLICATION SPEC: 114–2048
WEIGHT: –

Tyco Electronics
Tyco Electronics Corporation
Harrisburg, PA 17105–3608

NAME: STACKED MODULAR JACK ASSEMBLY, 2x4 PORT, 8 POSITION, SHIELDED, PANEL GROUND, CATEGORY 5, GIGABIT ETHERNET

SIZE: A1 | CAGE CODE: 00779 | DRAWING NO: C–2007105 | RESTRICTED TO: –

CUSTOMER DRAWING | SCALE 4:1 | SHEET 1 OF 1 | REV B

AMP 4805 REV 31MAR2000

Downloaded From Oneyac.com

单击下面可查看定价，库存，交付和生命周期等信息

>>TE Connectivity(泰科)

Downloaded From Oneyac.com