THIS DRAWING IS UNPUBLISHED
VERTRAULICHE UNVEROEFFENTLICHE ZEICHNUNG

RELEASE FOR PUBLIKATION ,2000
FREI FUER VEROEFFENTLICHUNG

© COPYRIGHT 2000 BY AMP INCORPORATED ALL RIGHTS RESERVED
ALLE RECHTE VORBEHALTEN

| MATED WITH: PASSEND ZU: | LOC | DIST |
|---|---|---|
| BG5 | AI | - |

PROJEKT NR. EGGMA05416

REVISIONS
AENDERUNGEN

| P | LTR | DESCRIPTION BESCHREIBUNG | DATE | DWN | APVD |
|---|---|---|---|---|---|
| | B2 | ECR-17-013084 | 29MAR18 | SG | MKO |

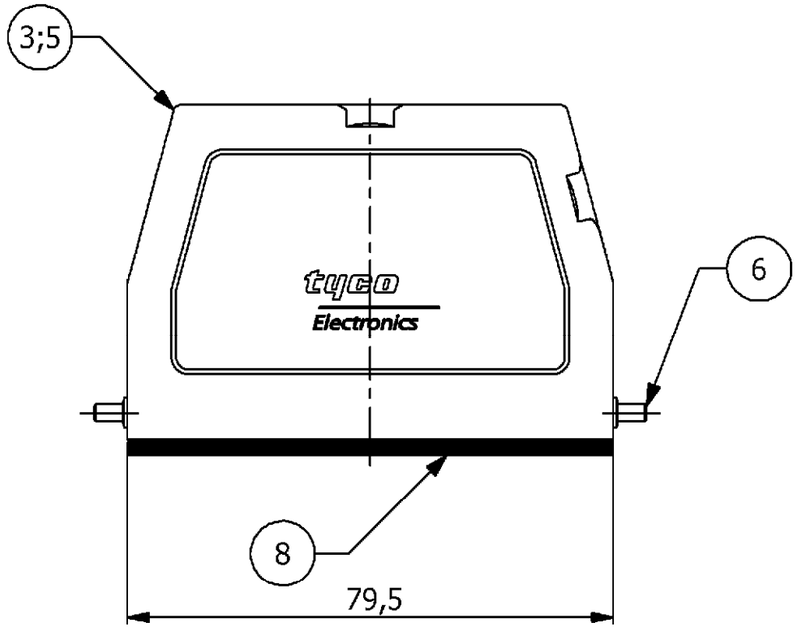


**PN 0-3 & 2-7 as shown**

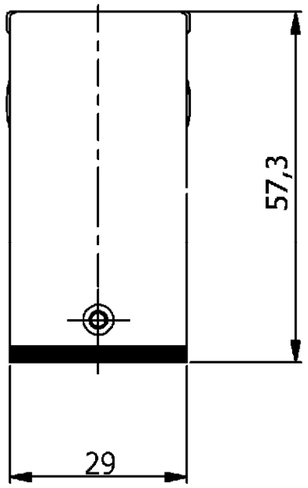


## NOTES

1 PACKAGING QUANTITY: 5 PIECES PER BOX

2 MATERIAL: HOUSING: ALUMINIUM DIECASTING ALLOY
SEALS: NEOPRENE

3 SURFACE: ALUMINIUM OXIDE + VARNISH BLACK
-GREY / BLACK / WITHOUT VARNISH

4 VARNISH ON THE INSIDE NOT NECESSARY

( 1 : 2 )

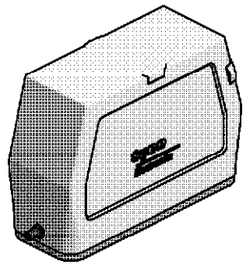

**PN 0-3 & 2-7**

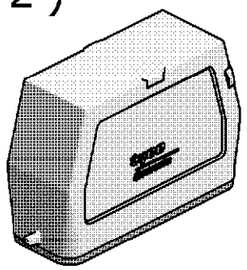

**PN 0-1,0-2 & 1-7**

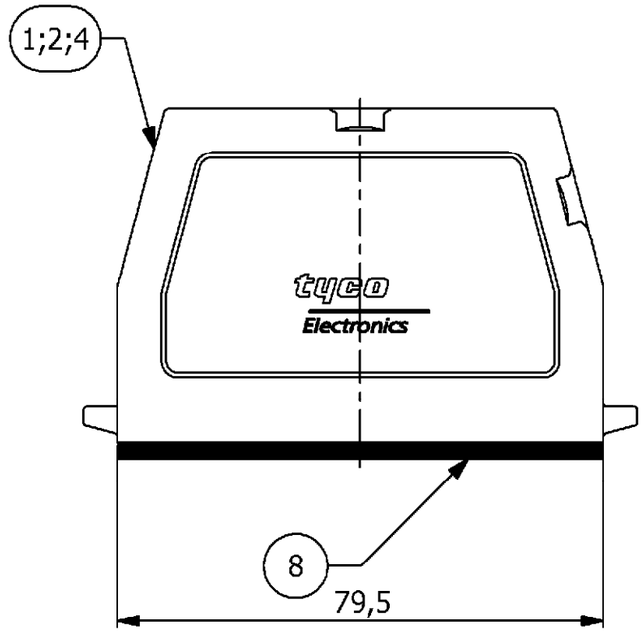


**PN 0-1,0-2 & 1-7 as shown**

OBSOLETE

| 2-7 | 1-7 | 0-3 | 0-2 | 0-1 | DESCRIPTION | MATERIAL | SURFACE | COLOR | ITEM NO. | REMARKS |
|---|---|---|---|---|---|---|---|---|---|---|
| 1 | 1 | 1 | 1 | 1 | Profile Seal | Neoprene | - | Black | 7 | Bg5 |
| 2 | - | 2 | - | - | Clip Bolt | V2A / Steel | Blank / Even | - | 6 | - |
| 1 | - | - | - | - | HA Hood | Aluminium | Aluminium oxide | Black | 5 | Pg16 |
| - | 1 | - | - | - | HA Hood | Aluminium | - | Grey | 4 | Pg16 |
| - | - | 1 | - | - | HA Hood | Aluminium | - | No Varnish | 3 | Pg16 |
| - | - | - | 1 | | HA Hood | Aluminium | - | Black | 2 | Pg16 |
| - | - | - | - | 1 | HA Hood | Aluminium | - | Grey | 1 | Without Pg Hole |
| | | | | | ORDERING TEXT | | | | | |
| | | | | HA.16.ST | | | | | | |
| | | | HA.16.STS.1.16.G | | | | | | | |
| | | HA.16.STS.1.16.G | | | | | | | | |
| | HA.16.STS.1.16.G | | | | | | | | | |
| HA-K.16.STS.1.16.G | | | | | | | | | | |

THIS DRAWING IS A CONTROLLED DOCUMENT FOR AMP INCORPORATED. IT IS SUBJECT TO CHANGE AND THE CONTROLLING ENGINEERING ORGANIZATION SHOULD BE CONTACTED FOR THE LATEST REVISION. DIESES ZEICHNUNGSDOKUMENT WIRD DURCH AMP INCORPORATED KONTROLLIERT. AENDERUNGEN, DIE DEM TECHNISCHEN FORTSCHRITT DIENEN, SIND VORBEHALTEN. DEN JEWEILS LETZTGUELTIGEN AENDERUNGSSTAND ERFAHREN SIE AUF ANFRAGE.

DIMENSIONS: DIMENSIONEN: mm

TOLERANCES UNLESS OTHERWISE SPECIFIED: ALLGEMEINTOLERANZEN
n. ISO 8015 -
n. ISO 2768 - mH-E
n. DIN 16901- 140
0 PLC #
1 PLC #
2 PLC #
3 PLC #
ANGLES / WINKEL #

MATERIAL 2

FINISH / OBERFLAECHE / FARBE 3

| | | |
|---|---|---|
| DWN | P.BENNUR | 2/24/2006 |
| CHK | R.SRINIVAS | 2/24/2006 |
| APVD | T.SCHNURPFEIL | 2/24/2006 |
| PRODUCT SPEC. PRODUKTSPEZ. | 108-74009 | |
| APPLICATION SPEC. VERARBEITUNGSSPEZ. | 114-74001 | |
| WEIGHT GEWICHT | - | |

TE Connectivity

NAME
HOOD
HA.16.STS.1.16.G

| SIZE | CAGE CODE | DRAWING NO ZEICHNUNGS-NR. | RESTRICTED TO NUR FUER |
|---|---|---|---|
| A3 | 00779 | C- 1102136 | |

CUSTOMER DRAWING / KUNDENZEICHNUNG

SCALE MASSSTAB 1:1 SHEET BLATT 1 OF VON 1 REV. B2

H:\HTS\EGGMA05416\HA_JNO\A\06\HA 16 Assemblies\1102136\C_1102136_B1.dw



This is a TRANSLATED file from Computervision, Inc,, Medusa R
Downloaded From Oneyac.com

单击下面可查看定价，库存，交付和生命周期等信息

>>TE Connectivity(泰科)

Downloaded From Oneyac.com