© – TE Connectivity. All Rights Reserved.

REVISIONS					
P	LTR	DESCRIPTION	DATE	DWN	APVD
	A	REVISED PER ECO-20-007113	27MAY2020	RZ	HL

1. HOUSING MATERIAL: GLASS-FILLED POLYMER.
2. POST MATERIAL: COPPER ALLOY.
3. POST FINISH: DIN 41612 CLASS 2 IN CONTACT AREA. TIN PLATE ON POSTS.
4. MARKINGS ON THIS SIDE.
5. RECOMMENDED HOLE SIZE FOR MANUAL APPLICATION OF CONNECTOR ONTO PC BOARD.
6. PART NUMBER, DATE CODE MARKED THIS APPROXIMATE AREA.

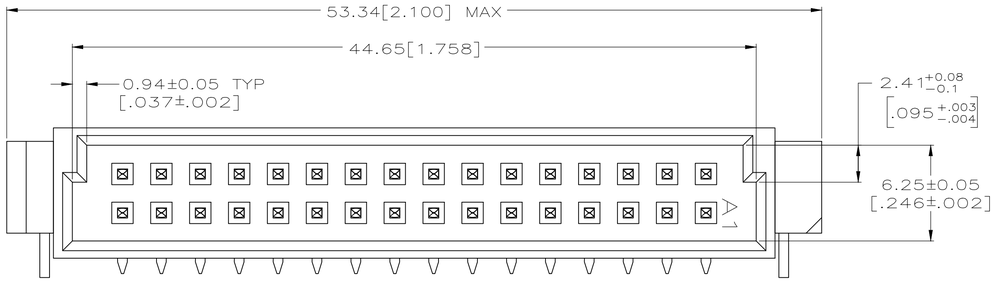

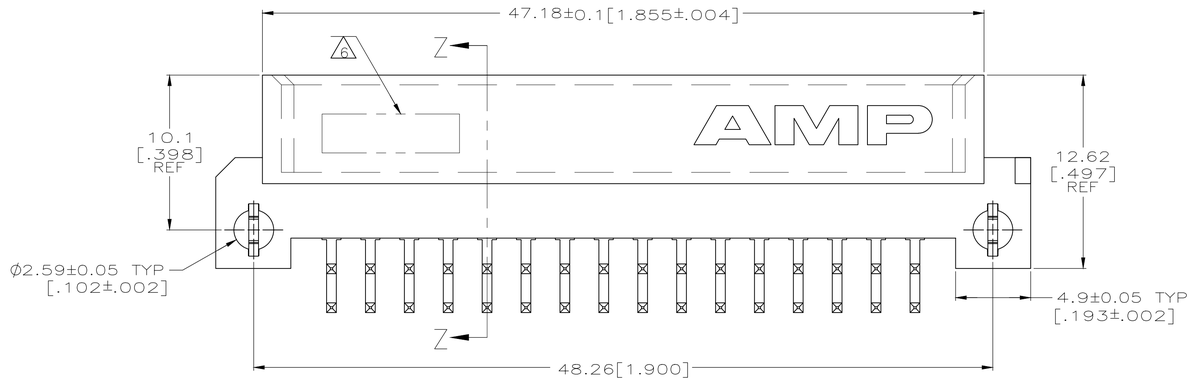

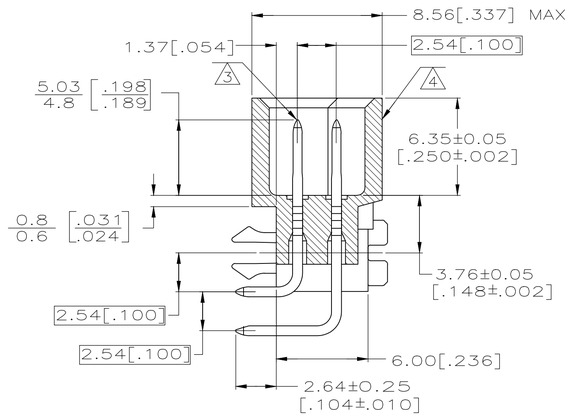

SECTION Z–Z

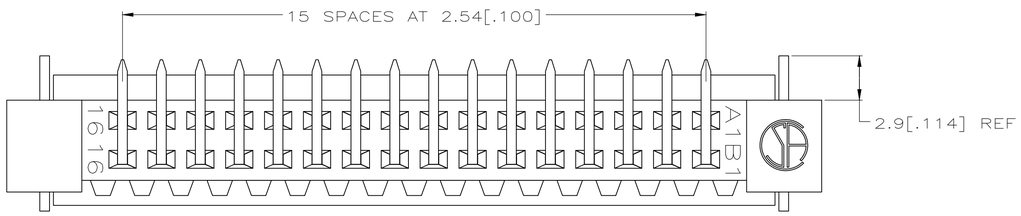

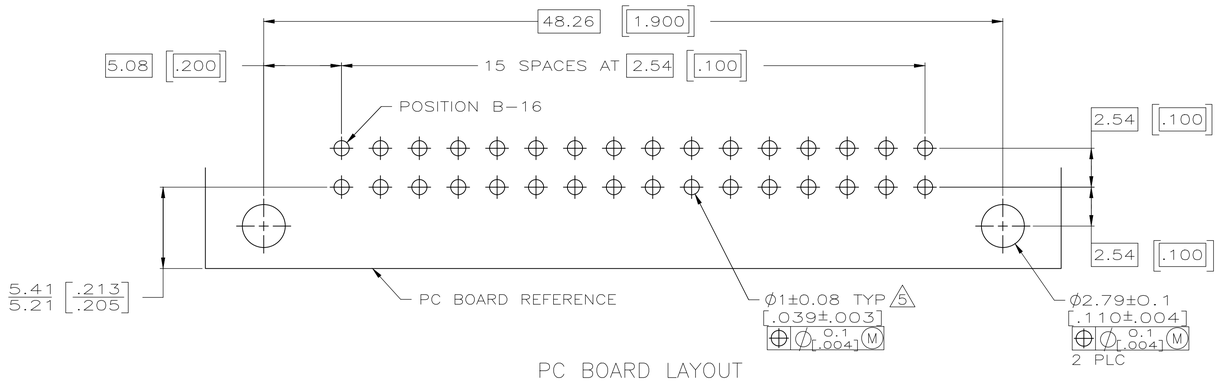

PC BOARD LAYOUT
RECOMMENDED PC BOARD THICKNESS 1.57[.062]

1–16	X	X	32	5536386–5
POSITIONS LOADED	B	A	NO. OF LOADED POSITION	ASSY PART NUMBER
	ROWS LOADED			

THIS DRAWING IS A CONTROLLED DOCUMENT.

DIMENSIONS: mm [INCHES]

TOLERANCES UNLESS OTHERWISE SPECIFIED:
0 PLC ± –
1 PLC ± –
2 PLC ± –
3 PLC ± 0.13[.005]
4 PLC ± –
ANGLES ± –

MATERIAL 1 2

FINISH 3

DWN J. POLIGNONE 05MAY05
CHK A. SHARPE 05MAY05
APVD A. SHARPE 05MAY05

PRODUCT SPEC —

APPLICATION SPEC —

WEIGHT 0.000000

TE Connectivity

NAME ASSY, PIN, EUROCARD, TYPE 1/2B, 32 P, 2.64 SOLDER POST, WITH BOARD-LOCKS

SIZE	CAGE CODE	DRAWING NO	RESTRICTED TO
A1	00779	C-5536386	—

CUSTOMER DRAWING | SCALE 5:1 | SHEET 1 OF 1 | REV A

4805 (1/15)

Downloaded From Oneyac.com

单击下面可查看定价，库存，交付和生命周期等信息

>>TE Connectivity(泰科)

Downloaded From Oneyac.com