THIS DRAWING IS UNPUBLISHED. RELEASED FOR PUBLICATION .1997
© COPYRIGHT 1997 BY TYCO ELECTRONICS CORPORATION. ALL RIGHTS RESERVED.

LOC	DIST
A1	-

REVISIONS

P	LTR	DESCRIPTION	DATE	DWN	APVD
	A3	Released as per ECR-08-018916	29.July.2008	SP	TS
	A4	REVISED PER ECO-09-027197	29JAN10	KK	HMR
	A5	REVISED PER ECR-18-013746	10APR2019	SR	MKO

PN 1-2

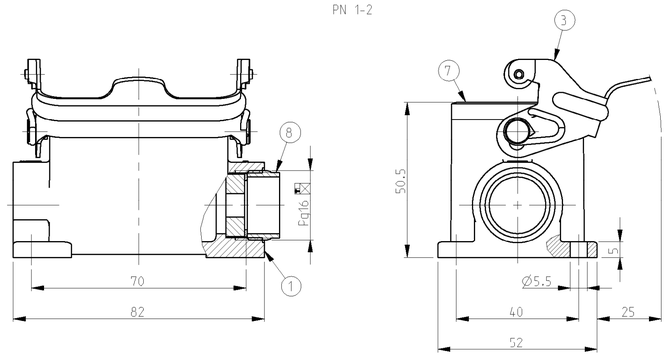

PN 1-8

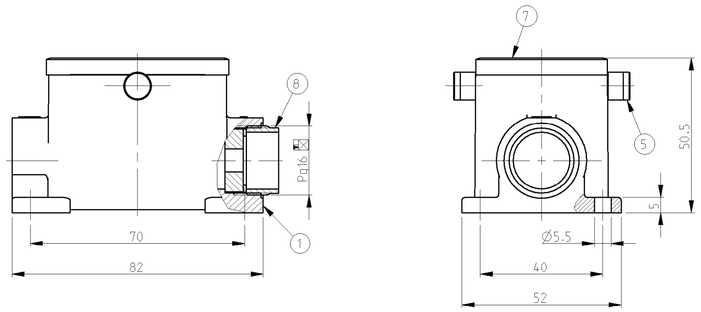

PN 2-2

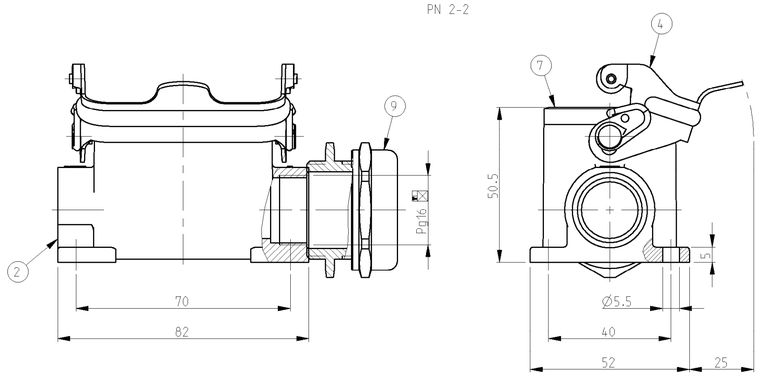

PN 2-8

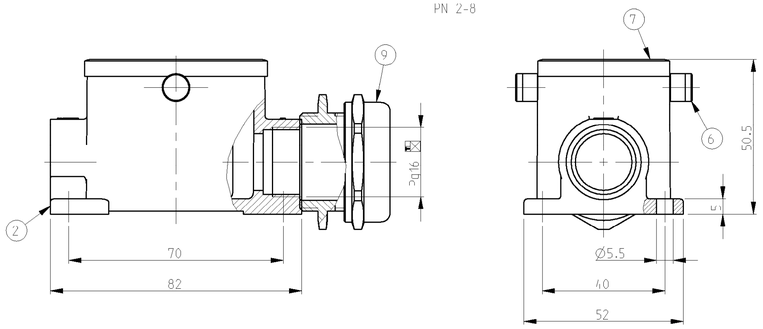

NOTES.

1 Material:Housing:Aluminium Diecasting Alloy
Seals:Neoprene

2 Surface:Varnish grey
-Aluminium Oxide +Varnish Black

4 Packaging
Quantity 5 Pieces in a box

5 OBSOLETE PARTS: OBSOLETE CIS STREAMLINING PER D.RENAUD/D.SINISI

PN 1-2	PN 2-2	PN 1-8	PN 2-8
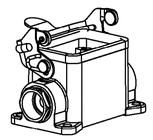	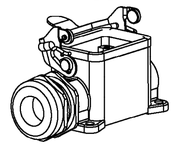	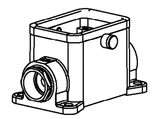	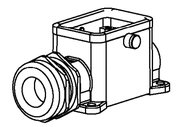
SCALE 1:2	SCALE 1:2	SCALE 1:2	SCALE 1:2

OBSOLETE	OBSOLETE 5	OBSOLETE	OBSOLETE								
							Gland Fitting Pg16	Brass	Nickel plated		9	
1						1	Cable fitting Pg16	Brass	Nickel plated		8	
1						1	Profile seal	Neoprene		Black	7	
	2						ZB-Clip bolt	Stainless steel			6	
		2					ZB-Clip bolt	Steel	Zinc plated	Blue	5	
1							LB-Side clip finished product	Stainless steel			4	
						1	LB-Side clip finished product	Steel	Zinc plated	Blue	3	
							Surface mounted housing side entry HB6.1.16	Aluminium	Aluminium oxide	Balck RAL 9005	2	
1						1	Surface mounted housing side entry HB6.1.16	Aluminium		Grey RAL 7001	1	
6-2	2-8	1-8	2-2	1-2			DESCRIPTION	MATERIAL	SURFACE	COLOR	ITEM NO	REMARKS

ORDERING TEXT

HB.6.SG-LB.1.16

HB-K.6.SG-LB.1.16

HB-Z.6.SG-ZVGR.1.16

HB-K/Z.6.SG-ZVGR.1.16

HB.6.SG-LB.1.16-SO

THIS DRAWING IS CONTROLLED DOCUMENT FOR TYCO ELECTRONICS CORPORATION
IT IS SUBJECT TO CHANGE AND THE CONTROLLING ENGINEERING ORGANIZATION
SHOULD BE CONTACTED FOR THE LATEST REVISION.

DIMENSIONS: mm

TOLERANCES UNLESS OTHERWISE SPECIFIED:
ISO 2768-m-K
ASME Y14.5M-1994
0 PLC ±
1 PLC ±
2 PLC ±
3 PLC ±
4 PLC ±
ANGLES ±

MATERIAL - -

FINISH - -

DWN Schneider 05.03.1999
CHK Schweiger 05.03.1999
APVD -
PRODUCT SPEC -
APPLICATION SPEC -
WEIGHT -

TE Connectivity

NAME Surface mounted housing side entry HB.6.1.16

SIZE	CAGE CODE	DRAWING NO	RESTRICTED TO
A1	00779	C-1102248	-

CUSTOMER DRAWING

SCALE 1:1 SHEET 1 OF 1 REV A5

AMP 4805 REV 31MAR2000

Pro/ENGINEER DRAWING

Downloaded From Oneyac.com

单击下面可查看定价，库存，交付和生命周期等信息

>>TE Connectivity(泰科)

Downloaded From Oneyac.com