THIS DRAWING IS UNPUBLISHED. RELEASED FOR PUBLICATION -,- .
© COPYRIGHT - BY TYCO ELECTRONICS CORPORATION. ALL RIGHTS RESERVED.

LOC	DIST
AJ	17

REVISIONS

P	LTR	DESCRIPTION	DATE	DWN	APVD
	O	RELEASED	13JAN2006	KS	JGH

1. SEE INSTRUCTION SHEET 408-8287

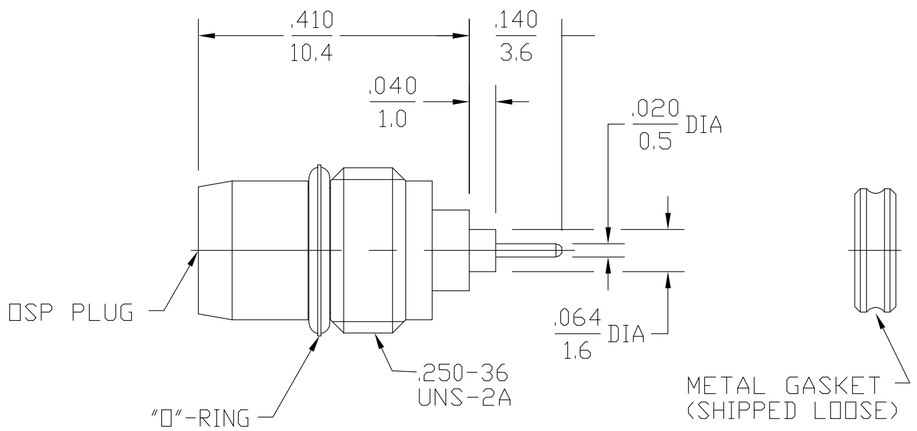

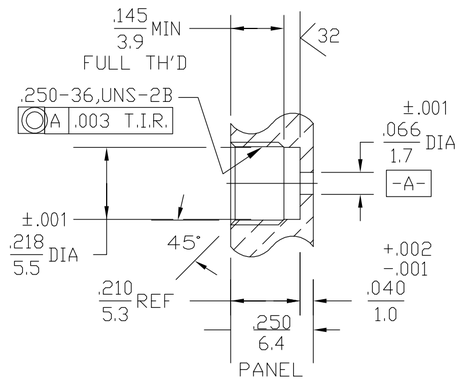

RECOMMENDED MOUNTING HOLE

ELECTRICAL		MECHANICAL		ENVIRONMENTAL
Nominal Impedance (Ohms)	50	Interface Dimensions MIL-STD-348A, Fig. 321.1		TEMPERATURE RATING -65° TO +125°C
Frequency Range (GHz) DC to	18	Center Contact Captivation Axial (Lbs)	6	Vibration MIL-STD-202, Method 204, Condition D
Volt Rating (VRMS MAX) @ Sea Level	375	Weight (Grams)	TBD	Shock MIL-STD-202, Method 213, Condition I
VSWR	1.04+.009f(GHz)	Hermetic Seal	1 x 10^{-8}cc/sec Helium at 1 Atm	Thermal Shock MIL-STD-202, Method 107, Condition B
Insertion Loss (dB MAX)	.05x $\sqrt{f(GHz)}$			Moisture Resistance MIL-STD-202, Method 106
RF Leakage (dB MIN) (Interface Only, Fully Mated)	-(90-f(GHz))			Corrosion - MIL-STD-202, Method 101, Condition B
Corona, 70,000 Ft (VRMS MIN)	335			
Dielectric Withstanding Voltage (VRMS MIN) @ Sea Level	1000			.XXX = in XX.X = mm (REF)
Contact Resistance (Milliohms MAX) Center Contact	10.0			
Outer Contact	2.0			
RF High Potential @ Sea Level (VRMS MIN @ 5 MHz)	1000			
I.R.(Megohms MIN)	5000			

COMPONENT	MATERIAL	FINISH
HOUSING	STAINLESS STEEL PER ASTM-A484 AND ASTM-A582, TYPE 303	PASSIVATE PER ASTM A 380
DIELECTRIC	TFE FLUOROCARBON PER ASTM-D-1710	N/A
CENTER CONTACT	BERYLLIUM COPPER PER ASTM B 196,	GOLD PLATE PER ASTM B 488
CONTACT EXT BUSHING	IRON-NICKEL-COBALT ALLOY PER MIL-I-23011 CLASS 1 (KOVAR)	GOLD PLATE PER ASTM B 488
"O" - RING	FLOUROSILICONE PER MIL-R-25988	N/A
HERMETIC SEAL	GLASS BEAD	N/A
GASKET	KOVAR	SILVER PLATE PER ASTM B 700

6059628

6059628-1
PART NUMBER

THIS DRAWING IS A CONTROLLED DOCUMENT.

DIMENSIONS: INCHES[mm]

TOLERANCES UNLESS OTHERWISE SPECIFIED:
0 PLC ± -
1 PLC ± -
2 PLC ± .005[0.13]
3 PLC ± -
4 PLC ± -
ANGLES ± 1°

MATERIAL: SEE TABLE
FINISH: SEE TABLE

DWN DK SCHRUM 13JAN2006
CHK JG HAVENER 13JAN2006
APVD JG HAVENER 13JAN2006
PRODUCT SPEC —
APPLICATION SPEC —
WEIGHT —

tyco Electronics
Tyco Electronics Corporation
Harrisburg, PA 17105-3608

NAME: OSP PANEL FEEDTHRU, PLUG RECEPTACLE, HERMETICALLY SEALED (4557-5066-02)

SIZE	CAGE CODE	DRAWING NO	RESTRICTED TO
A2	00779	C-6059628	—

CUSTOMER DRAWING | SCALE 6:1 | SHEET 1 OF 1 | REV O

AMP 1471-9 REV 31MAR2000

Downloaded From Oneyac.com

单击下面可查看定价，库存，交付和生命周期等信息

>>TE Connectivity(泰科)

Downloaded From Oneyac.com