THIS DRAWING IS A CONTROLLED DOCUMENT FOR TYCO ELECTRONICS CORPORATION
AND ITS SUBSIDIARIES. THIS DRAWING IS THE PROPERTY OF THE ORGANIZATION
TO WHOM IT IS CONTRACTED FOR THE LATEST REVISION.
DIESES ZEICHNUNGSDOKUMENT WIRD DURCH AMP INCORPORATED KONTROLLIERT.
ANDERUNGEN DIE DER TECHNISCHEN FORTSCHRITT DIENEN, SIND VORBEHALTEN.
NUR AKTUELL LETZTEN ZEICHNUNGSSTAND FOERDERN OF AMP ANFRAGE.
© COPYRIGHT 2000 BY TYCO ELECTRONICS CORPORATION. ALL RIGHTS RESERVED.
ALLE RECHTE VORBEHALTEN.

RELEASED FOR PUBLICATION - 2000
FREI ZUR VEROEFFENTLICHUNG

MATED WITH
PASSEND ZU:

| LOC | DIST |
|---|---|
| A1 | – |

PROJEKT NR.: EGLPC01017

REVISIONS / AENDERUNGEN

| P | LTR | DESCRIPTION / BESCHREIBUNG | DATE | DWN | APVD |
|---|---|---|---|---|---|
| | A1 | EG00-0576-01 | 18JUN2001 | NG | GF |

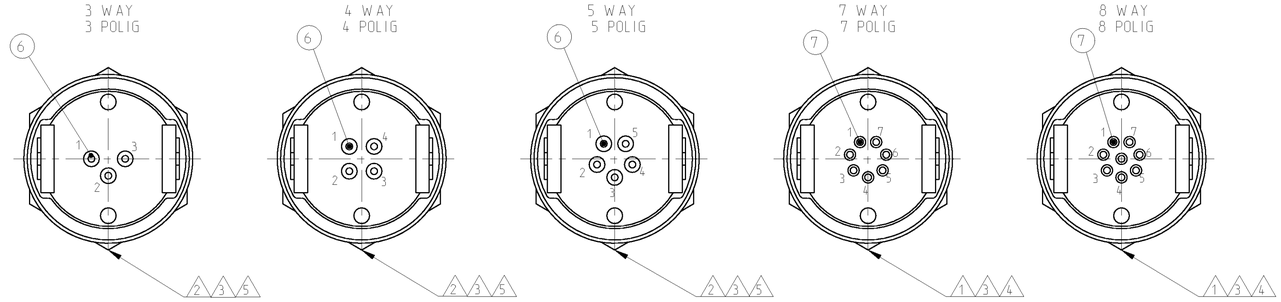


PCB HOLES
PCB THICKNESS 1.6 mm MAX.
PCB LOCHBILD
PCB DICKE 1.6 mm MAX.

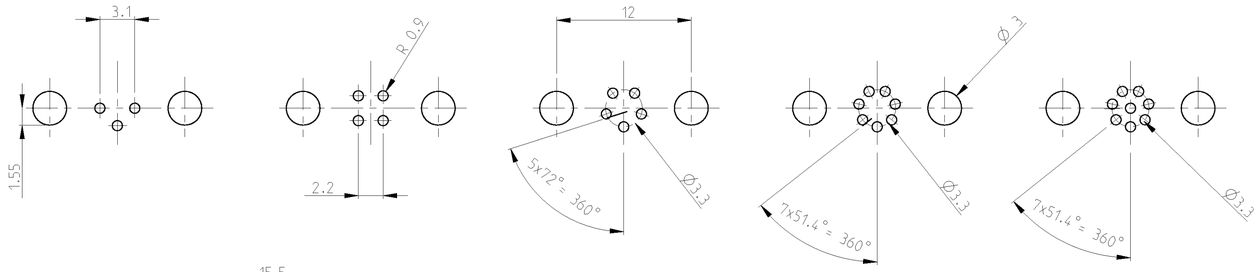


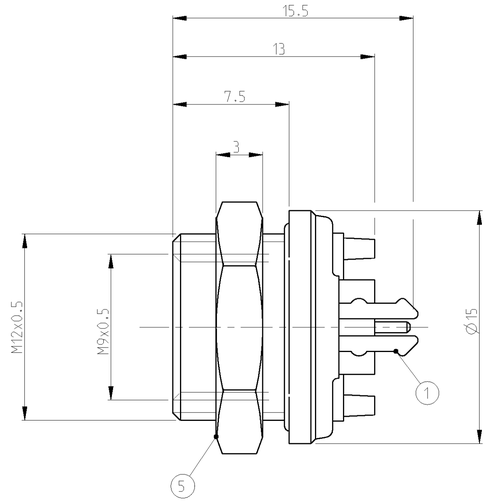


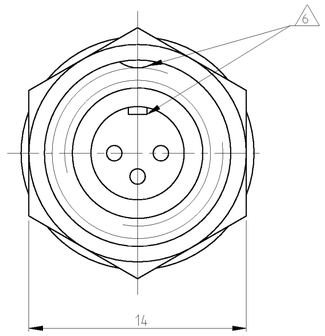


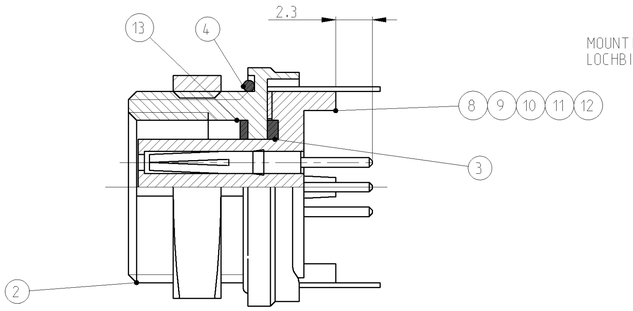


MOUNTING HOLE DIMENSION
LOCHBILD FUER MONTAGE

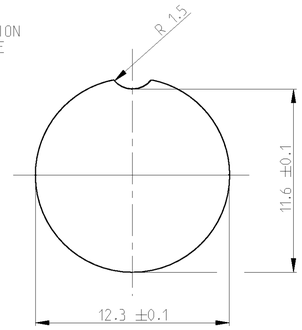


| | |
|---|---|
| MATERIAL / MATERIAL: PBT. UL-94 V2<br>SHELL MATERIAL / GEHAEUSEMATERIAL: CUZN<br>FINISH / BESCHICHTUNG: TRIBOR 4 µm | 7 |
| CODING / KODIERUNG | 6 |
| WIRE GAGE / DRAHTGROESSE IN $mm^2$: 0.25 | 5 |
| WIRE GAGE / DRAHTGROESSE IN $mm^2$: 0.14 | 4 |
| CONTACT RESISTANCE / KONTAKTWIDERSTAND: => 5 mΩ | 3 |
| RATED CURRENT PER CONTACT / NENNSTROM PRO KONTAKT: 3 A | 2 |
| RATED CURRENT PER CONTACT / NENNSTROM PRO KONTAKT: 1 A | 1 |
| SHELL PROTECTION CLASS / SCHUTZKLASSE:IP 65 / DIN 40050 | |
| TERMINATION: SOLDERING / VERBINDUNG: LOETKONTAKTE | |
| TEST VOLTAGE / PRUEFSPANNUNG: 500 VAC | |
| OPERATING VOLTAGE / BETRIEBSSPANNUNG: 60 VAC | |
| OPERATING TEMPERATURE: -40°C TO +80°C /<br>ARBEITSTEMPERATUR: -40°C BIS +80°C | |
| MATING CYCLES / STECKZYKLEN: 500 MAX. | |
| TECHNICAL DATA<br>TECHNISCHE DATEN | |

| TYCO-NO. / TYCO NR. | | | | | | |
|---|---|---|---|---|---|---|
| 7-1437719-8 | 7-1437719-5 | 7-1437719-2 | 6-1437719-9 | 6-1437719-6 | | |
| 1 | 1 | 1 | 1 | 1 | SEAL / DICHTUNG | 13 |
| 1 | | | | | INSULATION TUBE 8 POS. / ISOLIERHUELSE 8 POL. | 12 |
| | 1 | | | | INSULATION TUBE 7 POS. / ISOLIERHUELSE 7 POL. | 11 |
| | | 1 | | | INSULATION TUBE 5 POS. / ISOLIERHUELSE 5 POL. | 10 |
| | | | 1 | | INSULATION TUBE 4 POS. / ISOLIERHUELSE 4 POL. | 9 |
| | | | | 1 | INSULATION TUBE 3 POS. / ISOLIERHUELSE 3 POL. | 8 |
| 8 | 7 | | | | SOCKET APPLIED BY PRESSURE /<br>BUCHSENKONTAKT EINGEPRESST | 7 |
| | | 5 | 4 | 3 | SOCKET APPLIED BY PRESSURE /<br>BUCHSENKONTAKT EINGEPRESST | 6 |
| 1 | 1 | 1 | 1 | 1 | NUT / MUTTER | 5 |
| 1 | 1 | 1 | 1 | 1 | SEAL / DICHTUNG | 4 |
| 1 | 1 | 1 | 1 | 1 | SEAL / DICHTUNG | 3 |
| 1 | 1 | 1 | 1 | 1 | HOUSING / GEHAEUSE | 2 |
| 1 | 1 | 1 | 1 | 1 | GROUND ON PCB SPRING /<br>VERBINDUNGSFEDER ZUR PCB MASSE | 1 |
| - | - | - | - | - | REVISION OF EACH ASSY NO. (WHEN BLANK, USE DWG REV.) | |
| QTY REQD PER ASSY | | | | | DESCRIPTION / BESCHREIBUNG | ITEM-NO. TEIL-NR. |
| T01-0570-S08 | T01-0570-S07 | T01-0570-S05 | T01-0570-S04 | T01-0570-S03 | PARTS LIST / TEILE LISTE | |
| CATALOG-NO. | CATALOG-NO. | CATALOG-NO. | CATALOG-NO. | CATALOG-NO. | | |

6-1437719-6 AS SHOWN / WIE GEZEICHNET

DIMENSIONS: MASSEINHEITEN: mm

TOLERANCES UNLESS OTHERWISE SPECIFIED: ALLGEMEINTOLERANZEN
0 PLC ±0.3
1 PLC ±
2 PLC ±±
3 PLC ±±±
4 PLC ±±±±
ANGLES/WINKEL: 44°

MATERIAL – / – 7

FINISH/OBERFLAECHE/FARBE – / – 7

DWN N.GEISTER 18JUN2001
CHK H.SCHERER 18JUN2001
APVD G.FELDMEIER 18JUN2001
PRODUCT SPEC PRODUKTSPEZ. –
APPLICATION SPEC VERARBEITUNGSSPEZ. –
WEIGHT GEWICHT –

tyco Electronics
tyco Electronics AMP GmbH
D - 64625 Bensheim

NAME
T01 FEMALE PLUG CONN. PANEL MNT. PCB VER. 3-8 POS. 180 DGR.
T01 BUCHSENSTECKER,EINBAU,PCB VER. 3-8 POL. 180 GRAD
–

| SIZE | CAGE CODE | DRAWING NO ZEICHNUNGS-NR. | RESTRICTED TO NUR FUER |
|---|---|---|---|
| A1 | 00779 | C-6-1437719-6 | – |

CUSTOMER DRAWING /KUNDENZEICHNUNG | SCALE MASSSTAB – | SHEET BLATT 1 OF VON 1 | REV A1

AMP 4805 REV 31MAR2000

Pro/ENGINEER DRAWING

Downloaded From Oneyac.com

单击下面可查看定价，库存，交付和生命周期等信息

>>TE Connectivity(泰科)

Downloaded From Oneyac.com