DRAWING MADE IN THIRD ANGLE PROJECTION

© COPYRIGHT 1973 BY AMP INCORPORATED, HARRISBURG, PA.
ALL INTERNATIONAL RIGHTS RESERVED. AMP INCORPORATED PRODUCTS COVERED BY U. S. AND FOREIGN PATENTS AND/OR PATENTS PENDING.

Unpublished copy not to be reproduced nor published without written permission of AMP Incorporated

LOC	DIST
L	37

REVISIONS

P	F	ZONE	LTR	DESCRIPTION	DATE	APPROVED
			A	ADDED .468 DIA., .38, 2.00, ECN 8041, DS	5-19-75	
			B	REMOVED -2 WAS GOLD PLATED. DS	5-19-78	
	✓		C	REV PER ECN S-3960	4-10-87	RB
			D	REVISED PER OH14-0192-05	1-06	PY
			E	REV PER ECO-12-009412 PY	6-21-1	DE

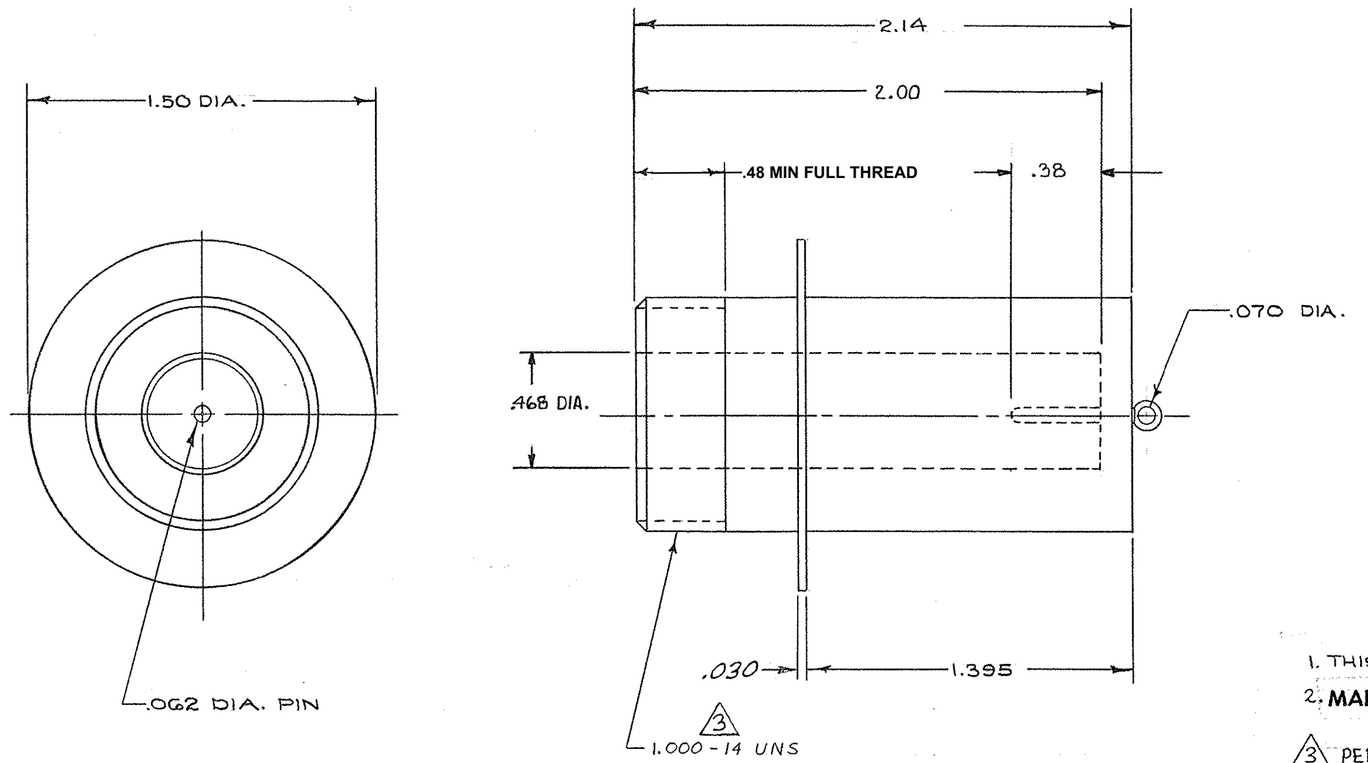

1. THIS RECEPTACLE IS HERMETICALLY SEALED
2. MARK PER AMP SPEC. 118-36000 (WHITE INK)
3. PER FEDERAL STANDARD H-28 3 WIRE METHOD. DIMENSION OVER WIRES TO BE: .9975 - 1.0186.

AS SHOWN WITH TIN PLATED PIN & FLANGE	5-861258-1
AS SHOWN WITH TIN-LEAD PLATED PIN & FLANGE	861258-1
	PART NO

NEXT ASSY	FINAL ASSY	NEXT ASSY	USED ON
QTY REQD		APPLICATION	

UNLESS OTHERWISE SPECIFIED DIMENSIONS ARE IN INCHES.
TOLERANCES:
.00 ±.01 .000 ±.005
ANGLES ±

MATERIAL: MOLDED GLASS EPOXY

FINISH: BLACK

CONTRACT NO

DR: D. Meyer 7/26/73

CHK

APPD: RE Fry 7-31-73

APPD

DSGN APPD

OTHER APPD

AMP INCORPORATED Elizabethtown, Pa.

NAME: RECEPTACLE, FLANGED LGH-4

SIZE	CODE IDENT NO	NUMBER	REV
C	89110	861258	E

SCALE 2:1 | WT | SHEET 1 OF 1

UP-DATED

AMP 1471-5 (1-73)

CUSTOMER DRAWING

Downloaded From Oneyac.com

单击下面可查看定价，库存，交付和生命周期等信息

>>TE Connectivity(泰科)

Downloaded From Oneyac.com