THIS DRAWING IS UNPUBLISHED. RELEASED FOR PUBLICATION 20
© COPYRIGHT 20 BY - ALL RIGHTS RESERVED.

LOC	DIST
FX	00

REVISIONS

P	LTR	DESCRIPTION	DATE	DWN	APVD
	P	REVISED PER ECO-11-000262	06JAN2011	DLD	WTW
	R	REVISED PER ECO-11-006070	28MAR2011	DLD	WTW
	S	REVISED PER ECO-12-006350	03APR2012	DLD	WTW
	S1	REVISED PER ECO-20-012415	10SEP2020	AP	WW

KEYING OPTIONS
SCALE 2:1

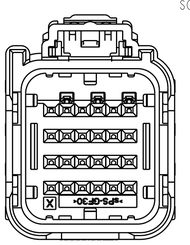
OPTION "A"

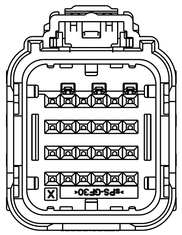
OPTION "B"

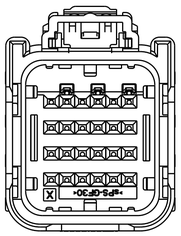
OPTION "C"

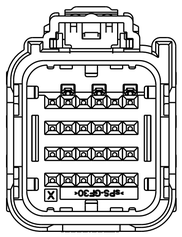
OPTION "D"

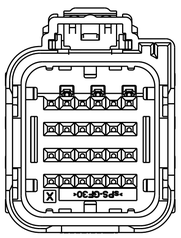
OPTION "E"

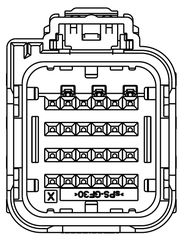
OPTION "F"

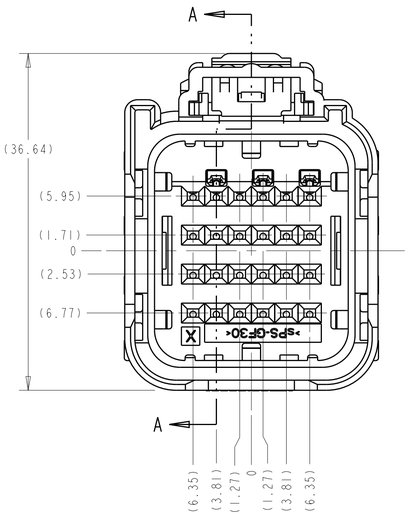

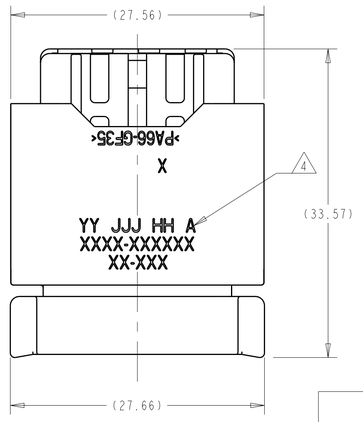

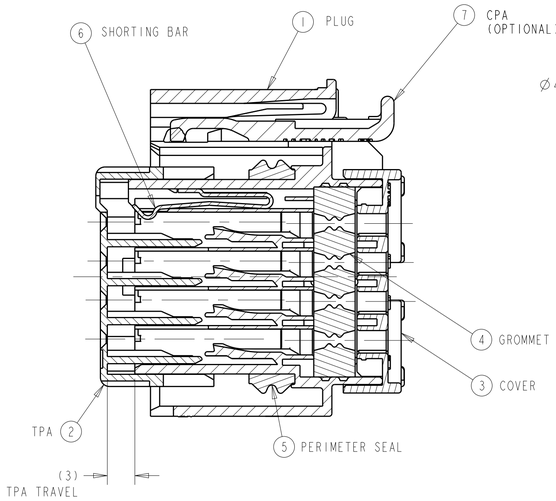

SECTION A-A
SHOWN WITH TPA IN
IT'S PRE-LOADED POSITION
(DELIVERY CONDTION)

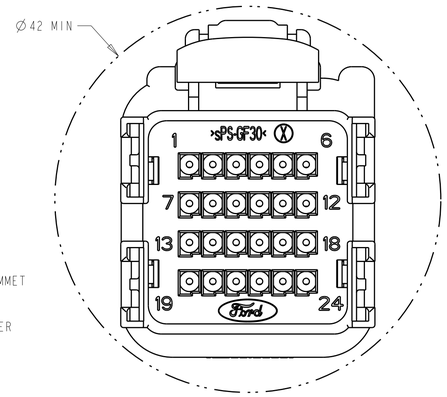

MINIMUM FEED THROUGH CONDITION
WITH 1mm CLEARANCE ALL AROUND

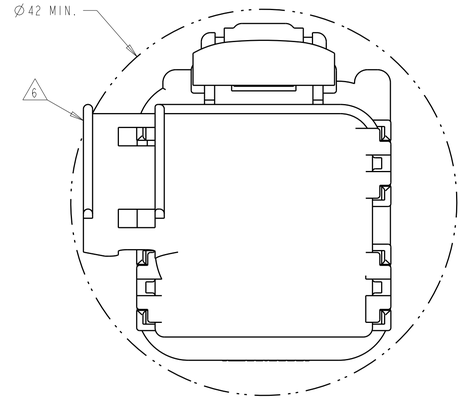

MINIMUM FEED THROUGH CONDITION
WITH 1mm CLEARANCE ALL AROUND
SHOWN WITH OPTION WIRESHIELD

1. APPLICABLE TERMINAL PART NUMBERS (SOLD SEPARATELY):
   FOR TIN APPLICATIONS: 1393367 AND 1393366.
   FOR GOLD APPLICATIONS: 1393365 AND 1393364.
   FOR TERMINATION AND REELING OPTIONS
   SEE DRAWINGS 1393367, 1393366, 1393365, AND 1393364.

2. COMPATIBLE WIRE SIZES FOR MAT SEAL DESIGN 1.19 TO 2.06 O.D.
   (22-18 AWG, 0.35-0.75 mm2)

3. TPA IS SHIPPED IN IT'S PRE-LOADED POSITION. ALL ASSEMBLIES ARE TO BE TRAY PACKAGED.

4. CUSTOMER PART NUMBER AND TRACEABILITY CODE (YY = TWO DIGIT YEAR, JJJ = JULIAN DAY, HH = TWO DIGIT MILITARY HOUR, A = ASSEMBLY PROCESS USED) ARE PRINTED IN THIS LOCATION.

5. PART ASSEMBLY WEIGHT WITHOUT TERMINALS AND WITH STANDARD PIN-OUT CONFIGURATION IS 14.39 GRAMS.

6. OPTIONAL WIRESHIELD P/N 7-1419157-8 (SOLD SEPARATELY). PLEASE CONTACT YOUR TYCO ELECTRONICS SALES REPRESENTATIVE FOR AVAILABILITY AND PRICING.

7. OBSOLETE PART

ASSEMBLY PART NUMBERS

2-1924675-2	2-1924675-1	2-1924675-0	1-1924675-9	1-1924675-8	1-1924675-7	1-1924675-6	1-1924675-5	1-1924675-4	1-1924675-3	1-1924675-2	1-1924675-1	1-1924675-0	1924675-9	1924675-8	1924675-7	1924675-6	1924675-5	1924675-4	1924675-3	1924675-2	1924675-1	1-1924674-3	1-1924674-2	1-1924674-1	1-1924674-0	1924674-9	1924674-8	1924674-7	1924674-6	1924674-5	~~1924674-4~~ 7	1924674-3	1924674-2	~~1924674-1~~ 7	ITEM	DESCRIPTION	MATERIAL	FINISH/COLOR
1	1	1	1	1	1	1	1	1	1	1	1	1	1	1	1	1	1	1	1	1	1														7	CPA	PBT-GF15	RED
2	2	2	2	2	2	2	2	2	2	2	2	2	2	2	2	2	2	2	2	2	2	2	2	2	2	2	2	2	2	2	2	2	2	2	6	SHORTING BAR	S.S.	SEE COMPONENT DRAWING
1	1	1	1	1	1	1	1	1	1	1	1	1	1	1	1	1	1	1	1	1	1	1	1	1	1	1	1	1	1	1	1	1	1	1	5	PERIMETER SEAL	SILICONE	GREEN
1	1	1	1	1	1	1	1	1	1	1	1	1	1	1	1	1	1	1	1	1	1	1	1	1	1	1	1	1	1	1	1	1	1	1	4	GROMMET	SILICONE	BROWN
1	1	1	1	1	1	1	1	1	1	1	1	1	1	1	1	1	1	1	1	1	1	1	1	1	1	1	1	1	1	1	1	1	1	1	3	COVER	PA66 35% GF	BLACK
1	1	1	1	1	1	1	1	1	1	1	1	1	1	1	1	1	1	1	1	1	1	1	1	1	1	1	1	1	1	1	1	1	1	1	2	TPA WITH 3 SHORTING BAR POSITIONS CONFIGURATION	sPS 30% GF	NATURAL
																																			1	PLUG WITH KEYING OPTION "F" AND 3 SHORTING BAR POSITIONS CONFIGURATION	PA66 30% GF	BLACK
																																			1	PLUG WITH KEYING OPTION "E" AND 3 SHORTING BAR POSITIONS CONFIGURATION	PA66 35% GF	BLACK
																																			1	PLUG WITH KEYING OPTION "C" AND 3 SHORTING BAR POSITIONS CONFIGURATION	PA66 35% GF	BLACK
																																			1	PLUG WITH KEYING OPTION "A" AND 3 SHORTING BAR POSITIONS CONFIGURATION	PA66 35% GF	BLACK
																																			1	PLUG WITH KEYING OPTION "D" AND 3 SHORTING BAR POSITIONS CONFIGURATION	PA66 35% GF	BLACK
																																			1	PLUG WITH KEYING OPTION "C" AND 3 SHORTING BAR POSITIONS CONFIGURATION	PA66 35% GF	NATURAL
																																			1	PLUG WITH KEYING OPTION "B" AND 3 SHORTING BAR POSITIONS CONFIGURATION	PA66 35% GF	BLACK
1	1	1	1	1	1	1	1	1	1	1	1	1	1	1	1	1	1	1	1	1	1	1	1	1	1	1	1	1	1	1	1	1	1	1	1	PLUG WITH KEYING OPTION "A" AND 3 SHORTING BAR POSITIONS CONFIGURATION	PA66 35% GF	GRAY
QUANTITY																																			ITEM	DESCRIPTION	MATERIAL	FINISH/COLOR

KEYING OPTION "A" SHOWN

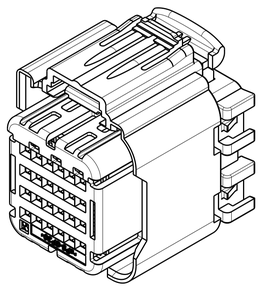
SCALE 2:1

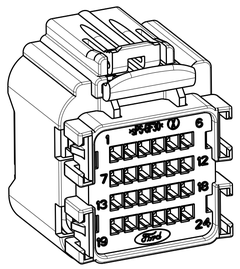

SCALE 2:1

THIS DRAWING IS A CONTROLLED DOCUMENT.

DIMENSIONS: mm

TOLERANCES UNLESS OTHERWISE SPECIFIED:
0 PLC ±-
1 PLC ±0.3
2 PLC ±0.10
3 PLC ±-
4 PLC ±-
ANGLES ±1°

MATERIAL: SEE CHART ABOVE
FINISH: - -

DWN	R. VESTAL	24JUL2007
CHK	W. WELLINSKY	24JUL2007
APVD	W. WELLINSKY	24JUL2007
PRODUCT SPEC	-	
APPLICATION SPEC	-	
WEIGHT	SEE-NOTE 5	

TE Connectivity

NAME: 24 WAY ARM PLUG ASSEMBLY WITH SELECT LOAD SHORTING BARS CUSTOMER SPEC.

SIZE	CAGE CODE	DRAWING NO	RESTRICTED TO
A1	00779	C-1924674	

CUSTOMER DRAWING | SCALE 3:1 | SHEET 1 OF 5 | REV S1

Downloaded From Oneyac.com

THIS DRAWING IS UNPUBLISHED. RELEASED FOR PUBLICATION 20
© COPYRIGHT 20 BY - ALL RIGHTS RESERVED.

LOC	DIST
FX	00

REVISIONS

P	LTR	DESCRIPTION	DATE	DWN	APVD
	-	SEE SHEET 1	-	-	-

ASSEMBLY PART NUMBERS

2098376-1	1924686-1	1924685-1	1924684-1	1924683-1	1924682-1	ITEM	DESCRIPTION	MATERIAL	FINISH/COLOR
						7	CPA	PBT-GF15	RED
1	1	1	1	1	1	6	SHORTING BAR	S.S.	SEE COMPONENT DRAWING
1	1	1	1	1	1	5	PERIMETER SEAL	SILICONE	GREEN
1	1	1	1	1	1	4	GROMMET	SILICONE	BROWN
1	1	1	1	1	1	3	COVER	PA66 35% GF	BLACK
1	1	1	1	1	1	2	TPA WITH 3 SHORTING BAR POSITIONS CONFIGURATION	sPS 30% GF	NATURAL
1						1	PLUG WITH KEYING OPTION "F" AND 3 SHORTING BAR POSITIONS CONFIGURATION	PA66 30% GF	BLACK
	1					1	PLUG WITH KEYING OPTION "E" AND 3 SHORTING BAR POSITIONS CONFIGURATION	PA66 35% GF	BLACK
			1			1	PLUG WITH KEYING OPTION "C" AND 3 SHORTING BAR POSITIONS CONFIGURATION	PA66 35% GF	BLACK
					1	1	PLUG WITH KEYING OPTION "A" AND 3 SHORTING BAR POSITIONS CONFIGURATION	PA66 35% GF	BLACK
		1				1	PLUG WITH KEYING OPTION "D" AND 3 SHORTING BAR POSITIONS CONFIGURATION	PA66 35% GF	BLACK
						1	PLUG WITH KEYING OPTION "C" AND 3 SHORTING BAR POSITIONS CONFIGURATION	PA66 35% GF	NATURAL
				1		1	PLUG WITH KEYING OPTION "B" AND 3 SHORTING BAR POSITIONS CONFIGURATION	PA66 35% GF	BLACK
						1	PLUG WITH KEYING OPTION "A" AND 3 SHORTING BAR POSITIONS CONFIGURATION	PA66 35% GF	GRAY

QUANTITY

THIS DRAWING IS A CONTROLLED DOCUMENT.

DIMENSIONS: mm

TOLERANCES UNLESS OTHERWISE SPECIFIED:
0 PLC ±-
1 PLC ±0.3
2 PLC ±0.10
3 PLC ±-
4 PLC ±-
ANGLES ±1°

MATERIAL - SEE CHART ABOVE

FINISH - -

DWN R. VESTAL 24JUL2007
CHK W. WELLINSKY 24JUL2007
APVD W. WELLINSKY 24JUL2007

PRODUCT SPEC -

APPLICATION SPEC -

WEIGHT -

TE Connectivity

NAME 24 WAY ARM PLUG ASSEMBLY WITH SELECT LOAD SHORTING BARS CUSTOMER SPEC.

SIZE	CAGE CODE	DRAWING NO	RESTRICTED TO
A1	00779	C-1924674	

CUSTOMER DRAWING | SCALE 3:1 | SHEET 2 OF 5 | REV S1

4805 (3/11)

Downloaded From Oneyac.com

THIS DRAWING IS UNPUBLISHED. RELEASED FOR PUBLICATION 20
© COPYRIGHT 20 BY - ALL RIGHTS RESERVED.

LOC	DIST
FX	00

REVISIONS

P	LTR	DESCRIPTION	DATE	DWN	APVD
	-	SEE SHEET 1	-	-	-

PIN-OUT CHART

	3 / 4	1 / 2	1	2			5	6	7	8	9	10	11	12		14	15	16	17	18			21		23	24	N	1-1924674-3	KEY "A"
	3 / 4	1 / 2					5	6	7	8	9	10	11	12		14	15	16	17	18			21		23	24	N	1-1924674-2	KEY "A"
	3 / 4	1 / 2					5	6					11	12		14	15	16	17	18	19	20	21		23	24	N	1-1924674-1	KEY "A"
	3 / 4	1 / 2					5	6					11	12		14	15	16	17	18		20	21		23	24	N	1-1924674-0	KEY "A"
	3 / 4	1 / 2					5	6	7	8	9	10	11	12		14	15	16	17	18			21		23	24	N	1924674-9	KEY "A"
	3 / 4	1 / 2					5	6					11	12			15	16	17	18	19	20	21		23	24	N	1924674-8	KEY "A"
	3 / 4	1 / 2					5	6								14	15	16	17	18	19	20	21		23	24	N	1924674-7	KEY "A"
	3 / 4	1 / 2					5	6								14	15	16	17	18		20	21		23	24	N	1924674-6	KEY "A"
	3 / 4	1 / 2					5	6									15	16	17	18		20	21		23	24	N	1924674-5	KEY "A"
	3 / 4	1 / 2					5	6					11	12			15	16	17	18		20	21		23	24	N	~~1924674-4~~ 1	KEY "A"
	3 / 4	1 / 2					5	6					11	12			15	16	17	18			21	22	23		N	1924674-3	KEY "A"
	3 / 4	1 / 2					5	6					11	12			15	16		18			21	22	23		N	1924674-2	KEY "A"
	3 / 4	1 / 2																									N	~~1924674-1~~ 1	KEY "A"
5 / 6	3 / 4	1 / 2	1	2	3	4	5	6	7	8	9	10	11	12	13	14	15	16	17	18	19	20	21	22	23	24	CPA	ASSEMBLY PART NUMBER	PLUG KEYING OPTION
SHORTING BAR POSITION			TERMINAL HOLE POSITION																										
CAVITIES W/ A NUMERIC SYMBOL INDICATE SHORTING BAR LOADED			CAVITIES WITH A NUMERIC SYMBOL INDICATE CLOSED TERMINAL HOLE POSITIONS																										
BLANK CAVITIES INDICATE NO SHORTING BAR LOADED			BLANK CAVITIES INDICATE OPEN TERMINAL HOLE POSITIONS																										

THIS DRAWING IS A CONTROLLED DOCUMENT.

DIMENSIONS: mm

TOLERANCES UNLESS OTHERWISE SPECIFIED:
0 PLC ±-
1 PLC ±0.3
2 PLC ±0.10
3 PLC ±-
4 PLC ±-
ANGLES ±3°

MATERIAL - SEE CHART ABOVE
FINISH - -

DWN R. VESTAL 24JUL2007
CHK W. WELLINSKY 24JUL2007
APVD W. WELLINSKY 24JUL2007
PRODUCT SPEC -
APPLICATION SPEC -
WEIGHT -

TE Connectivity

NAME 24 WAY ARM PLUG ASSEMBLY WITH SELECT LOAD SHORTING BARS CUSTOMER SPEC.

SIZE	CAGE CODE	DRAWING NO	RESTRICTED TO
A1	00779	C-1924674	

CUSTOMER DRAWING SCALE 3:1 SHEET 3 OF 5 REV S1

Downloaded From Oneyac.com

THIS DRAWING IS UNPUBLISHED. RELEASED FOR PUBLICATION 20
© COPYRIGHT 20 BY - ALL RIGHTS RESERVED.

LOC	DIST
FX	00

REVISIONS

P	LTR	DESCRIPTION	DATE	DWN	APVD
	-	SEE SHEET 1	-	-	-

PIN-OUT CHART

	3 / 4	1 / 2					5	6					11	12		14		16	17	18					23	24	Y	2-1924675-2	KEY "A"
	3 / 4	1 / 2					5	6								14	15	16	17	18		20	21	22	23	24	Y	2-1924675-1	KEY "A"
	3 / 4	1 / 2	1	2	3	4	5	6	7	8	9	10	11	12			15	16	17	18	19	20	21	22	23	24	Y	2-1924675-0	KEY "A"
	3 / 4	1 / 2					5	6								14	15	16						22			Y	1-1924675-9	KEY "A"
	3 / 4	1 / 2					5	6								14	15	16				20	21	22			Y	1-1924675-8	KEY "A"
	3 / 4	1 / 2					5	6					11	12		14	15	16				20	21	22			Y	1-1924675-7	KEY "A"
	3 / 4	1 / 2					5	6					11	12		14	15	16						22			Y	1-1924675-6	KEY "A"
	3 / 4	1 / 2					5	6					11	12		14	15	16	17	18				22	23	24	Y	1-1924675-5	KEY "A"
	3 / 4	1 / 2					5	6					11	12		14	15	16	17	18		20	21	22	23	24	Y	1-1924675-4	KEY "A"
	3 / 4	1 / 2					5	6					11	12			15	16	17	18		20	21	22	23	24	Y	1-1924675-3	KEY "A"
	3 / 4	1 / 2							7	8	9	10	11	12					17	18			21		23		Y	1-1924675-2	KEY "A"
	3 / 4	1 / 2					5	6					11	12		14	15	16	17	18	19	20	21		23	24	Y	1-1924675-1	KEY "A"
	3 / 4	1 / 2					5	6					11	12		14	15	16	17	18		20	21		23	24	Y	1-1924675-0	KEY "A"
	3 / 4	1 / 2					5	6	7	8	9	10	11	12		14	15	16	17	18			21		23	24	Y	1924675-9	KEY "A"
	3 / 4	1 / 2					5	6					11	12			15	16	17	18	19	20	21		23	24	Y	1924675-8	KEY "A"
	3 / 4	1 / 2					5	6								14	15	16	17	18	19	20	21		23	24	Y	1924675-7	KEY "A"
	3 / 4	1 / 2					5	6								14	15	16	17	18		20	21		23	24	Y	1924675-6	KEY "A"
	3 / 4	1 / 2					5	6									15	16	17	18		20	21		23	24	Y	1924675-5	KEY "A"
	3 / 4	1 / 2					5	6					11	12			15	16	17	18		20	21		23	24	Y	1924675-4	KEY "A"
	3 / 4	1 / 2					5	6					11	12			15	16	17	18			21	22	23		Y	1924675-3	KEY "A"
	3 / 4	1 / 2					5	6					11	12			15	16		18			21	22	23		Y	1924675-2	KEY "A"
	3 / 4	1 / 2																									Y	1924675-1	KEY "A"
5 / 6	3 / 4	1 / 2	1	2	3	4	5	6	7	8	9	10	11	12	13	14	15	16	17	18	19	20	21	22	23	24	CPA	ASSEMBLY PART NUMBER	PLUG KEYING OPTION
SHORTING BAR POSITION			TERMINAL HOLE POSITION																										
CAVITIES W/ A NUMERIC SYMBOL INDICATE SHORTING BAR LOADED			CAVITIES WITH A NUMERIC SYMBOL INDICATE CLOSED TERMINAL HOLE POSITIONS																										
BLANK CAVITIES INDICATE NO SHORTING BAR LOADED			BLANK CAVITIES INDICATE OPEN TERMINAL HOLE POSITIONS																										

THIS DRAWING IS A CONTROLLED DOCUMENT.

DIMENSIONS: mm

TOLERANCES UNLESS OTHERWISE SPECIFIED:
0 PLC ±-
1 PLC ±0.3
2 PLC ±0.10
3 PLC ±-
4 PLC ±-
ANGLES ±3°

MATERIAL - SEE CHART ABOVE
FINISH - -

DWN R. VESTAL 24JUL2007
CHK W. WELLINSKY 24JUL2007
APVD W. WELLINSKY 24JUL2007
PRODUCT SPEC -
APPLICATION SPEC -
WEIGHT -

TE Connectivity

NAME 24 WAY ARM PLUG ASSEMBLY WITH SELECT LOAD SHORTING BARS CUSTOMER SPEC.

SIZE A1 | CAGE CODE 00779 | DRAWING NO C-1924674 | RESTRICTED TO

CUSTOMER DRAWING | SCALE 3:1 | SHEET 4 OF 5 | REV S1

4805 (3/11)

Downloaded From Oneyac.com

THIS DRAWING IS UNPUBLISHED. RELEASED FOR PUBLICATION 20
© COPYRIGHT 20 BY - ALL RIGHTS RESERVED.

LOC	DIST
FX	00

REVISIONS

P	LTR	DESCRIPTION	DATE	DWN	APVD
	-	SEE SHEET 1	-	-	-

PIN-OUT CHART

5 / 6	3 / 4	1 / 2	1	2	3	4	5	6	7	8	9	10	11	12	13	14	15	16	17	18	19	20	21	22	23	24	CPA	ASSEMBLY PART NUMBER	PLUG KEYING OPTION
		1 / 2																									N	2098376-1	KEY "F"
		1 / 2																									N	1924686-1	KEY "E"
		1 / 2																									N	1924685-1	KEY "D"
		1 / 2																									N	1924684-1	KEY "C"
		1 / 2																									N	1924683-1	KEY "B"
		1 / 2																									N	1924682-1	KEY "A"
SHORTING BAR POSITION			TERMINAL HOLE POSITION																										
CAVITIES W/ A NUMERIC SYMBOL INDICATE SHORTING BAR LOADED			CAVITIES WITH A NUMERIC SYMBOL INDICATE CLOSED TERMINAL HOLE POSITIONS																										
BLANK CAVITIES INDICATE NO SHORTING BAR LOADED			BLANK CAVITIES INDICATE OPEN TERMINAL HOLE POSITIONS																										

THIS DRAWING IS A CONTROLLED DOCUMENT.

DIMENSIONS: mm

TOLERANCES UNLESS OTHERWISE SPECIFIED:
0 PLC ±-
1 PLC ±0.3
2 PLC ±0.10
3 PLC ±-
4 PLC ±-
ANGLES ±1°

MATERIAL - SEE CHART ABOVE

FINISH - -

DWN R. VESTAL 24JUL2007
CHK W. WELLINSKY 24JUL2007
APVD W. WELLINSKY 24JUL2007

PRODUCT SPEC -
APPLICATION SPEC -
WEIGHT -

TE Connectivity

NAME 24 WAY ARM PLUG ASSEMBLY WITH SELECT LOAD SHORTING BARS CUSTOMER SPEC.

SIZE	CAGE CODE	DRAWING NO	RESTRICTED TO
A1	00779	C-1924674	

CUSTOMER DRAWING | SCALE 3:1 | SHEET 5 OF 5 | REV S1

4805 (3/11)

Downloaded From Oneyac.com

单击下面可查看定价，库存，交付和生命周期等信息

>>TE Connectivity(泰科)

Downloaded From Oneyac.com