THIS DRAWING IS UNPUBLISHED. RELEASED FOR PUBLICATION -,- .
© COPYRIGHT — TE Connectivity ALL RIGHTS RESERVED.

REVISIONS

P	LTR	DESCRIPTION	DATE	DWN	APVD
	D	REV PER ECO 18-015726	10-5-18	CT	DM

1. GOLD PLATED PER MIL-G-45204,TYPE II, GRADE C, CLASS I OVER NICKEL PER QQ-N-290 .000030/.000150 THICK.

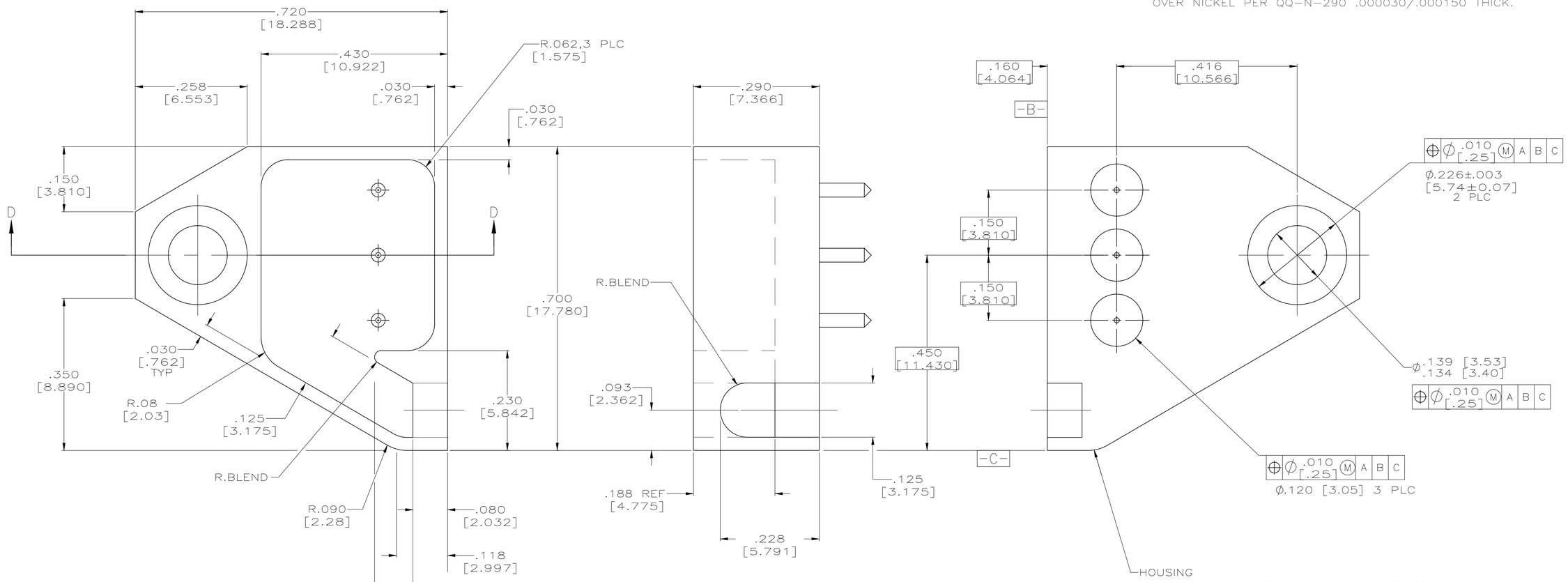

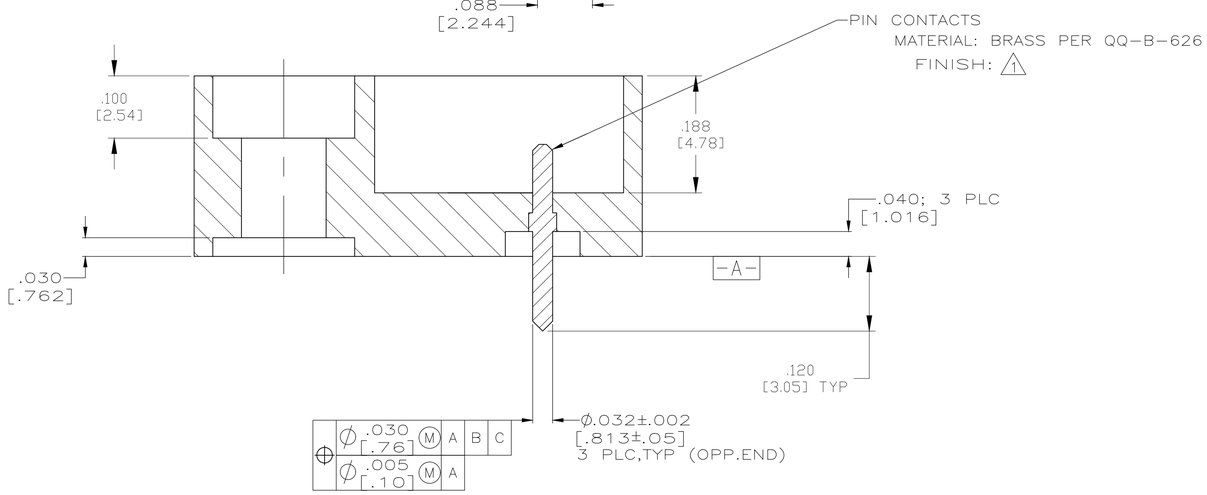

SECTION D-D

447589-1
PART NO

THIS DRAWING IS A CONTROLLED DOCUMENT.	DWN D.E.STAHL 9-19-91	TE Connectivity	
DIMENSIONS: INCHES	CHK J.P.SCHOLZ 02-18-92		
TOLERANCES, UNLESS OTHERWISE SPECIFIED: 0 PLC ± – 1 PLC ± – 2 PLC ± .01 [0.3] 3 PLC ± .005 [0.13] 4 PLC ± – ANGLES ± –	APVD J.P.SCHOLZ 02-18-92	NAME FUZE SYSTEM CONNECTOR, TWISTED PAIR	
	PRODUCT SPEC –		
	APPLICATION SPEC –	SIZE A1 / CAGE CODE 00779 / DRAWING NO C-447589	RESTRICTED TO –
MATERIAL SEE CALLOUT / FINISH SEE CALLOUT	WEIGHT 0.000000		
	CUSTOMER DRAWING	SCALE 8:1 / SHEET 1 OF 1	REV D

4805 (1/15)

Downloaded From Oneyac.com

单击下面可查看定价，库存，交付和生命周期等信息

>>TE Connectivity(泰科)

Downloaded From Oneyac.com