THIS DRAWING IS UNPUBLISHED. RELEASED FOR PUBLICATION - ,- .
© COPYRIGHT - BY TYCO ELECTRONICS CORPORATION. ALL RIGHTS RESERVED.

LOC	DIST
ES	00

REVISIONS

P	LTR	DESCRIPTION	DATE	DWN	APVD
	L	REV PER ECR-10-005634	24MAR2010	SA.Y	SY

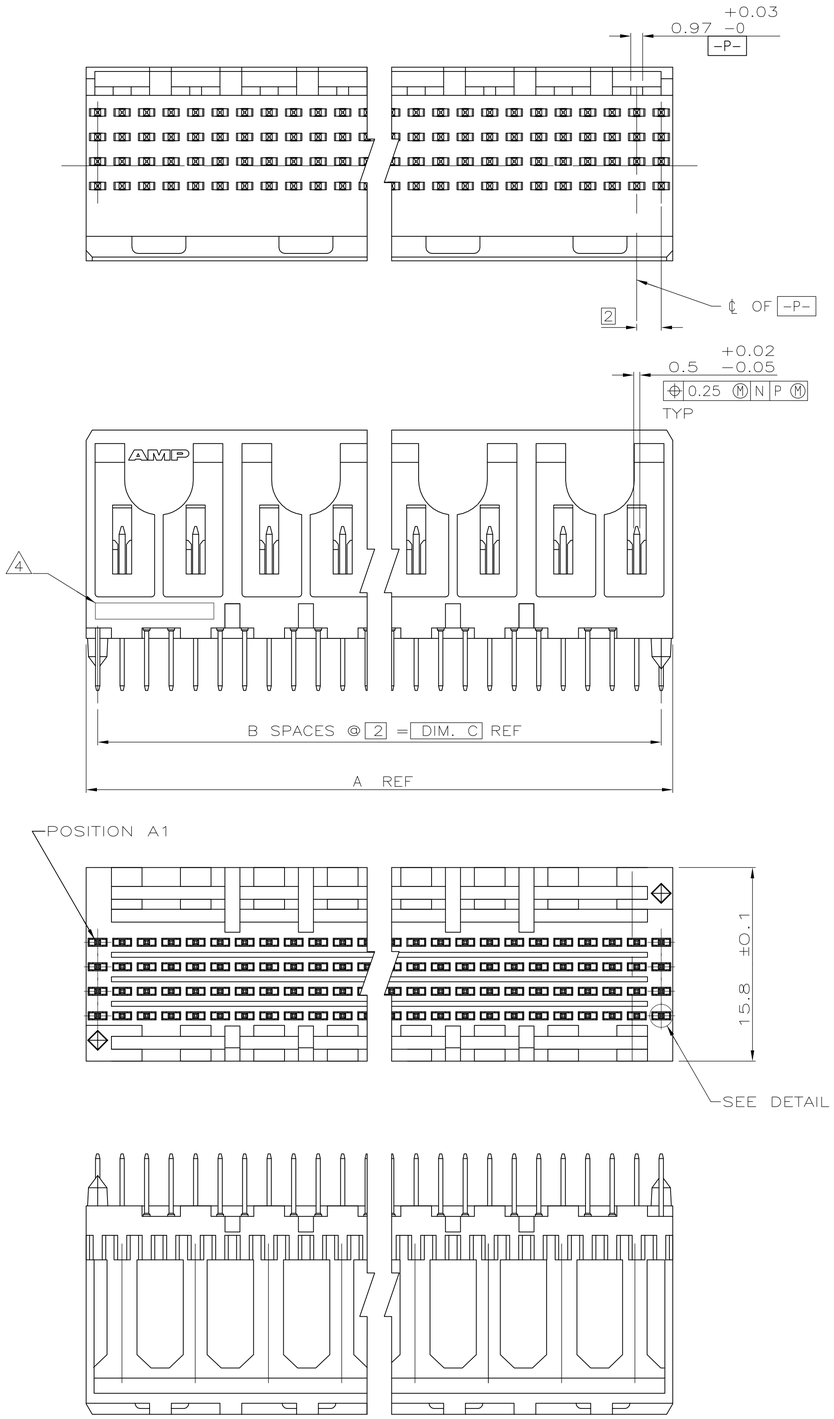

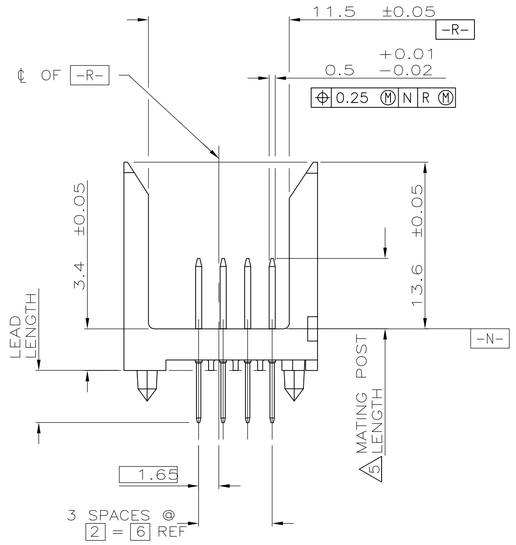

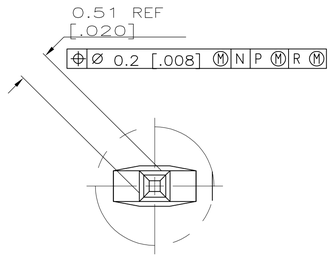

DETAIL Z
SCALE 20:1

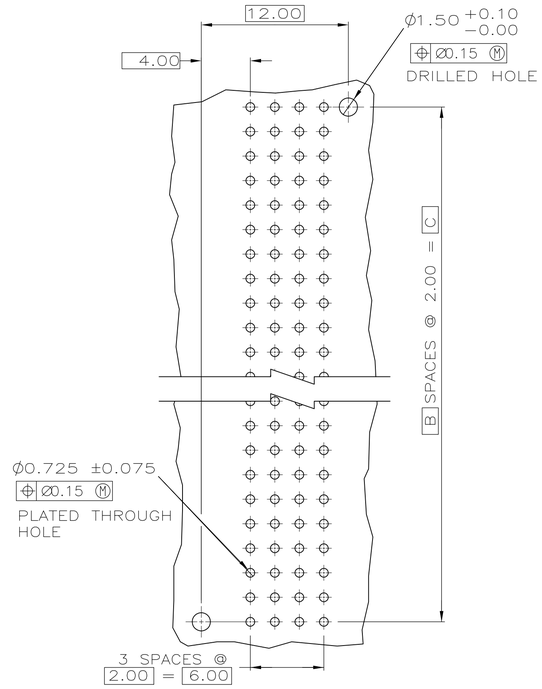

RECOMMENDED CIRCUIT PATTERN
PER IPC-D300 TYPE II, CLASS C
(COMPONENT SIDE)

1. HOUSING MATERIAL: LIQUID CRYSTAL POLYMER
   COLOR: NATURAL.
2. CONTACT MATERIAL: PHOSPHOR BRONZE.
3. CONTACT FINISH:
   UNDERPLATE (ENTIRE CONTACT):
   0.00127 MIN NICKEL.
   ON MATING SURFACES:
   CONFORMS TO ALL TESTING SPECIFIED FOR TELCORDIA
   UNCONTROLLED ENVIRONMENT.
   ON LEADS
   0.00381 MIN TIN-LEAD OVER UNDERPLATE.
   LUBRICATION (ENTIRE CONTACT):
   SURFACE CONDITIONER PER AMP SPEC 112-1002 AFTER PLATING.
4. PART MARKING LOCATED APPROXIMATELY AS SHOWN.
5. DIMENSION APPLIES WHEN SEATED ON PRINTED CIRCUIT BOARD

COLUMN X	C	B	A	FINISH	NO OF SIGNAL POSN	PART NUMBER
48	94	47	95.88	3	192	536545-2
24	46	23	47.88	3	96	536545-1

ROW	1	2	3																						X
D	BA	BE	BE	BE	BE	BE	BE	BE	BE	BE	BE	BE	BE	BE	BE	BE	BE	BE	BE	BE	BE	BE	BE	BE	
C	BE	BE	BE	BE	BE	BE	BE	BE	BE	BE	BE	BE	BE	BE	BE	BE	BE	BE	BE	BE	BE	BE	BE	BE	
B	BE	BE	BE	BE	BE	BE	BE	BE	BE	BE	BE	BE	BE	BE	BE	BE	BE	BE	BE	BE	BE	BE	BE	BE	
A	BE	BE	BE	BE	BE	BE	BE	BE	BE	BE	BE	BE	BE	BE	BE	BE	BE	BE	BE	BE	BE	BE	BE	BE	
	SIGNAL			SIGNAL						SIGNAL						SIGNAL						SIGNAL			
	POSITION																								

CODE LETTER	MATING POST LENGTH ±0.1 5	LEAD LENGTH (REF)
BA	5	4.25
BE	5.75	4.25

THIS DRAWING IS A CONTROLLED DOCUMENT.

DIMENSIONS: mm

TOLERANCES UNLESS OTHERWISE SPECIFIED:
0 PLC ± -
1 PLC ± -
2 PLC ± 0.13
3 PLC ± -
4 PLC ± -
ANGLES ± -

MATERIAL 1 2
FINISH 3

DWN R. BUCHHEISTER 16/JUN/95
CHK D.R. BAECHTLE 16/JUN/95
APVD D.B. SINISI 16/JUN/95
PRODUCT SPEC —
APPLICATION SPEC —
WEIGHT —

Tyco Electronics
Tyco Electronics Corporation
Harrisburg, Pa 17105-3608

NAME
ASSEMBLY, PIN, SIGNAL, VERTICAL,
Z-PACK 2mm FB, 4 ROW,
SOLDER LEADS, RANDOM SEQUENCED

SIZE	CAGE CODE	DRAWING NO	RESTRICTED TO
A1	00779	C-536545	—

CUSTOMER DRAWING | SCALE 4:1 | SHEET 1 OF 1 | REV L

Downloaded From Oneyac.com

单击下面可查看定价，库存，交付和生命周期等信息

>>TE Connectivity(泰科)

Downloaded From Oneyac.com