THIS DRAWING IS UNPUBLISHED. RELEASED FOR PUBLICATION DEC ,2003.
© COPYRIGHT 2003 By – ALL RIGHTS RESERVED.

REVISIONS

P	LTR	DESCRIPTION	DATE	DWN	APVD
	F1	REVISE PER ECR–19–016653	13NOV2019	RZ	RS

NOTES:

1. SINGLE PACK IN ACCORDANCE WITH SPEC 107–3275
2. 30 TRAY PACK IN ACCORDANCE WITH SPEC 107–3275
3. 0.08μm GOLD PLATING
4. 0.76μm GOLD PLATING
5. ELECTRICAL CHARACTERISTICS
   FREQUENCY RANGE:
   STAINLESS STEEL: DC–12.4GHz
   BRASS: DC–6GHz
   NOMINAL IMPEDANCE: 50 OHMS
   INSULATION RESISTANCE: 5000 MOHMS
   WORKING VOLTAGE: 500 VOLTS MAX.
   DIELECTRIC WITHSTAND VOLTAGE: 1000 VOLTS MAX.
   VSWR: 1.23 MAX.
   RETURN LOSS: DC..6GHz<=–19.73dB
   INSERTION LOSS: 0.1 dB MAX. @3 GHz
   CONTACT RESISTANCE:
   CENTRE CONTACT: 3 mOHMS
   OUTER CONTACT: 2 mOHMS
6. MECHANICAL CHARACTERISTICS
   DURABILITY: 500 CYCLES
   TORQUE SETTING 0.15–0.20 NM
7. EVNIRONMENTAL
   OPERATING TEMPERATURE: –65°~+165°
8. FOR TECHNICAL DATA REFER TO YOUR LOCAL TE CONNECTIVITY SALES OFFICE
9. ALL DIMENSIONS ARE NOMINAL FOR REFERENCE ONLY UNLESS OTHERWISE STATED

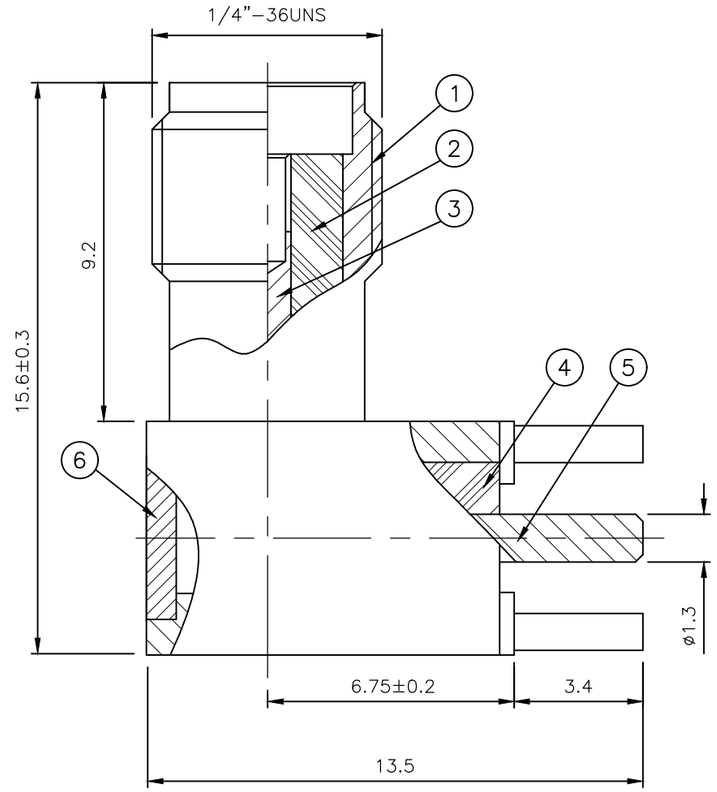

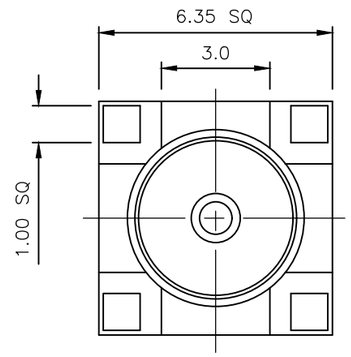

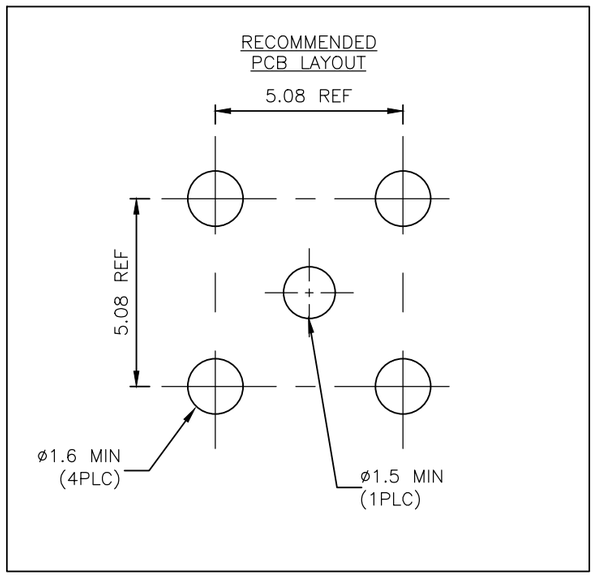

				1	1	–	–	BRASS 3	ACCESS CAP	6
				–	–	1	1	STAINLESS STEEL 3	ACCESS CAP	6
				–	1	1	1	BRASS 4	PIN	5
				1	–	–	–	BRASS 3	PIN	5
				1	1	1	1	PTFE	INSULATOR	4
				–	1	1	1	BERYLLIUM COPPER 4	SOCKET	3
				1	–	–	–	PHOSPHER BRONZE 3	SOCKET	3
				1	1	1	1	PTFE	INSULATOR	2
				1	1	–	–	BRASS 3	BODY	1
				–	–	1	1	STAINLESS STEEL 3	BODY	1
				3--1	3--0	1--1	1--0	MATERIAL	DESCRIPTION	ITEM
				2	1	2	1			
QUANTITY PER ASSY								PARTS LIST		

THIS DRAWING IS A CONTROLLED DOCUMENT.

DIMENSIONS: mm

TOLERANCES UNLESS OTHERWISE SPECIFIED:
0 PLC ± –
1 PLC ± 0.2
2 PLC ± 0.1
3 PLC ± –
4 PLC ± –
ANGLES ± 5°

MATERIAL: SEE TABLE

FINISH: –

DWN J.SANDWELL 09DEC03
CHK S.PARLOW 09DEC03
APVD F.WHEELER–KING 09DEC03
PRODUCT SPEC —
APPLICATION SPEC —
WEIGHT 0.000000

TE Connectivity

NAME: SMA RIGHT ANGLE PCB SOCKET RECEPTACLE
–
–

SIZE	CAGE CODE	DRAWING NO	RESTRICTED TO
A3	00779	C–1478978	—

CUSTOMER DRAWING | SCALE NTS | SHEET 1 OF 1 | REV F1

1470–19 (1/15)

Downloaded From Oneyac.com

单击下面可查看定价，库存，交付和生命周期等信息

>>TE Connectivity(泰科)

Downloaded From Oneyac.com