DRAWING MADE IN THIRD ANGLE PROJECTION

THIS DRAWING IS UNPUBLISHED. RELEASED FOR PUBLICATION . 19 .

© COPYRIGHT 19 BY AMP INCORPORATED, HARRISBURG, PA. ALL INTERNATIONAL RIGHTS RESERVED. AMP PRODUCTS MAY BE COVERED BY U.S. AND FOREIGN PATENTS AND/OR PATENTS PENDING.

LOC AJ DIST 16

REVISIONS

P	F	ZONE	LTR	DESCRIPTION	DATE	APPROVED
✓	✓		B	REV & REDWN C83-733		TS/LH
✓	✓		C	REV PER AJ-2419	1-15-87	BMA/GH

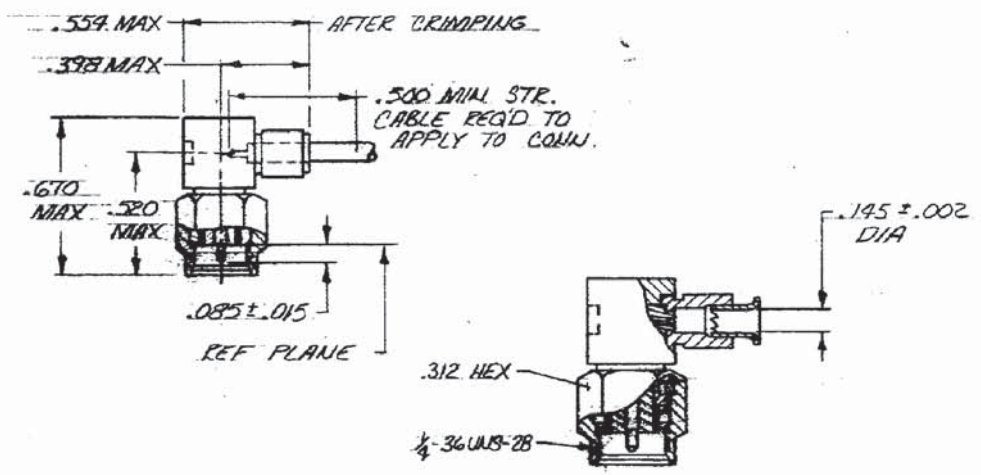

1. FOR USE WITH: .141 SEMI RIGID CABLE.
2. SILICONE RUBBER PER ZZ-R-765.
3. STAINLESS STEEL PER QQ-S-764.
4. BRASS PER QQ-B-613.
5. TEFLON PER LP-403.
6. NICKEL PL PER QQ-N-290.
7. GOLD PL PER MIL-G-45204.
8. BERYLLIUM COPPER PER QQ-C-530.
9. PASSIVATED BODY.
10. MILITARY P/N : 00779 M39012/80-3308

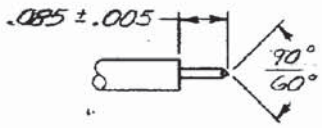

RECOMMENDED STRIP LENGTH

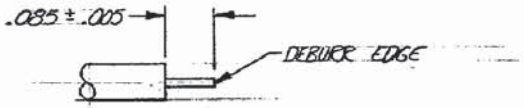

OPTIONAL STRIP LENGTH

PART NO

UNLESS OTHERWISE SPECIFIED DIMENSIONS ARE IN INCHES. TOLERANCES ON: DECIMALS ± — ANGLES ± —

MATERIAL 2 3 4 5 8

FINISH 6 7 9

CONTRACT NO

DR T. Smith 7/18/83

CHK D.S. Heide 7/22/83

APPD E.W. Toney 7/22/83

APPD T. Smith 7/25/83

DSGN APPD

OTHER APPD

AMP | AMP INCORPORATED Harrisburg, Pa.

NAME CONNECTOR, COAXIAL, R.F. PLUG, RIGHT ANGLE MIL-F, SERIES SMA

SIZE B | FSCM NO 00779 | DRAWING NO 228626-1

SCALE NTS | SHEET

AMP 1470-15 REV 2-81

CUSTOMER DRAWING

Downloaded From Oneyac.com

单击下面可查看定价，库存，交付和生命周期等信息

>>TE Connectivity(泰科)

Downloaded From Oneyac.com