THIS DRAWING IS UNPUBLISHED. RELEASED FOR PUBLICATION 19
© COPYRIGHT 20 BY TYCO ELECTRONICS CORPORATION. ALL RIGHTS RESERVED.

LOC	DIST
AD	00

REVISIONS

P	LTR	DESCRIPTION	DATE	DWN	APVD
	H	REVISED PER EC 0512-0072-04	12FEB2004	RWS	RHW
	J	REV PER ECO-06-026075	06FEB2007	BC	DB
	K	REVISED PER ECO-08-008615	10JUL2008	DH	DB
	K1	REVISED PER ECO-09-018464	26AUG2009	AEG	DD

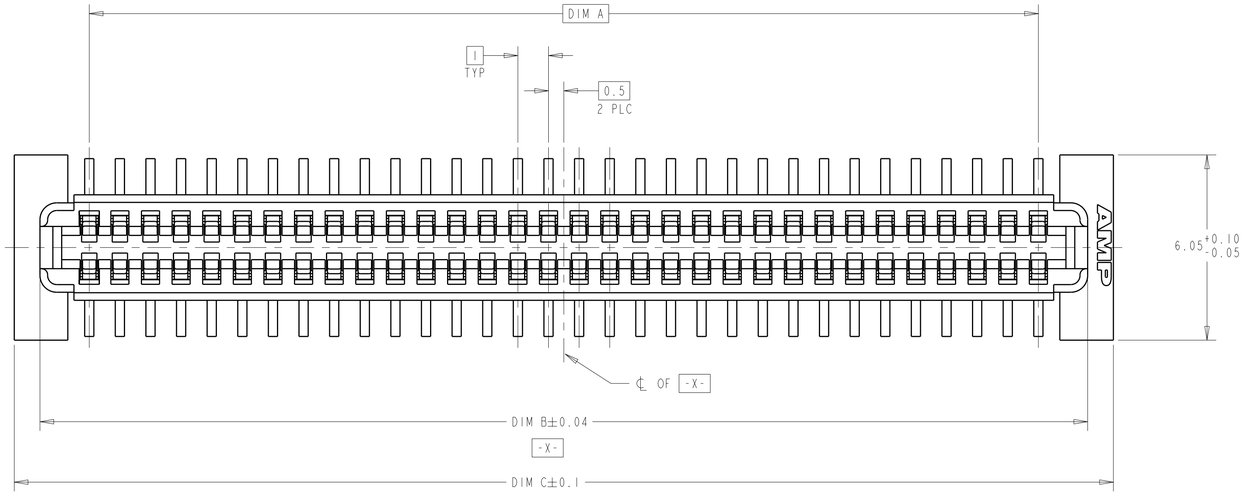

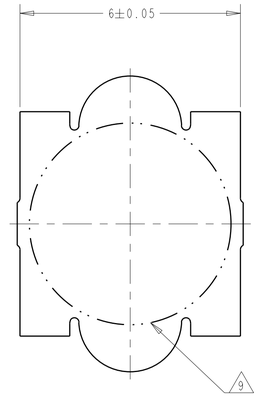

VACUUM COVER

1. HOUSING MATERIAL: HIGH TEMPERATURE THERMOPLASTIC, COLOR: BLACK.1
   CONTACT MATERIAL: PHOSPHOR BRONZE.
2. CONTACT FINISH: NICKEL UNDERPLATE ALL OVER, MATING SURFACES PLATED TO MEET PL1 PERFORMANCE REQUIREMENTS OF INDUSTRY SPECIFICATION EIA-700AAAB, SOLDER TAILS PLATED TIN-LEAD.
3. DATUM LOCATIONS AND BASIC DIMENSIONS TO BE ESTABLISHED BY THE CUSTOMER. CONSULT AMP ENGINEERING WHEN PLACING MULTIPLE CONNECTORS ON A PC BOARD.
4. PACKAGED IN TAPE ON REEL PER EIA-481.
5. 1.4±0.05 DIAMETER HOLE WHEN PLACING BY HAND.
6. SHORTER SOLDER LANDS MAY BE USED PER EIA 700AAAB, HOWEVER 2.4 LENGTH ASSURES OPTIMUM SOLDER FILLET REGARDLESS OF MANUFACTURER OF CONNECTOR.
7. REFERRED TO AS DIM H = 8.3±0.1 IN EIA 700AAAB SPECIFICATION.
8. VACUUM COVER NOT SHOWN IN SOME VIEWS FOR CLARITY.
9. 5.5 MIN DIAMETER TARGET AREA FOR VACUUM PICK-UP.
10. CONTACT FINISH: 0.00381 MINIMUM MATTE TIN-LEAD (93-7) ON SOLDER AREA. 0.00127 MINIMUM GOLD ON MATING AREA. BOTH OVER 0.00127 MINIMUM NICKEL ON ENTIRE CONTACT.
11. SQUARE AND DIAMOND SHAPED POSTS.
12. ROUND SHAPED POSTS.

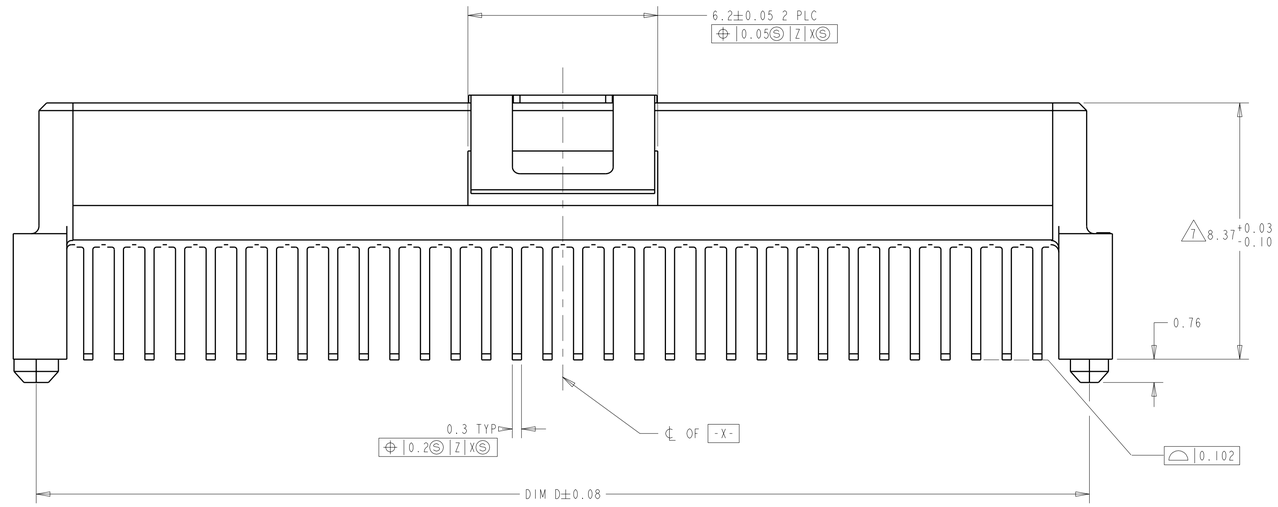

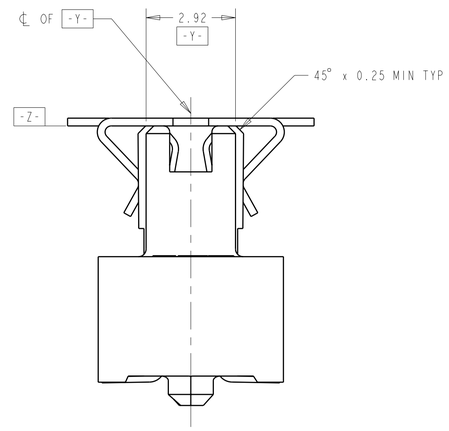

11 STYLE A POSTS

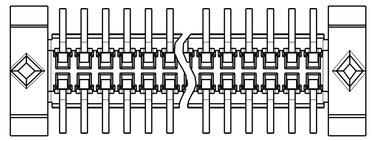

12 STYLE B POSTS

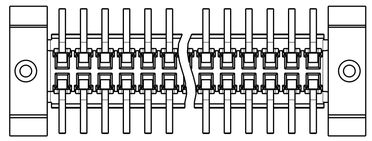

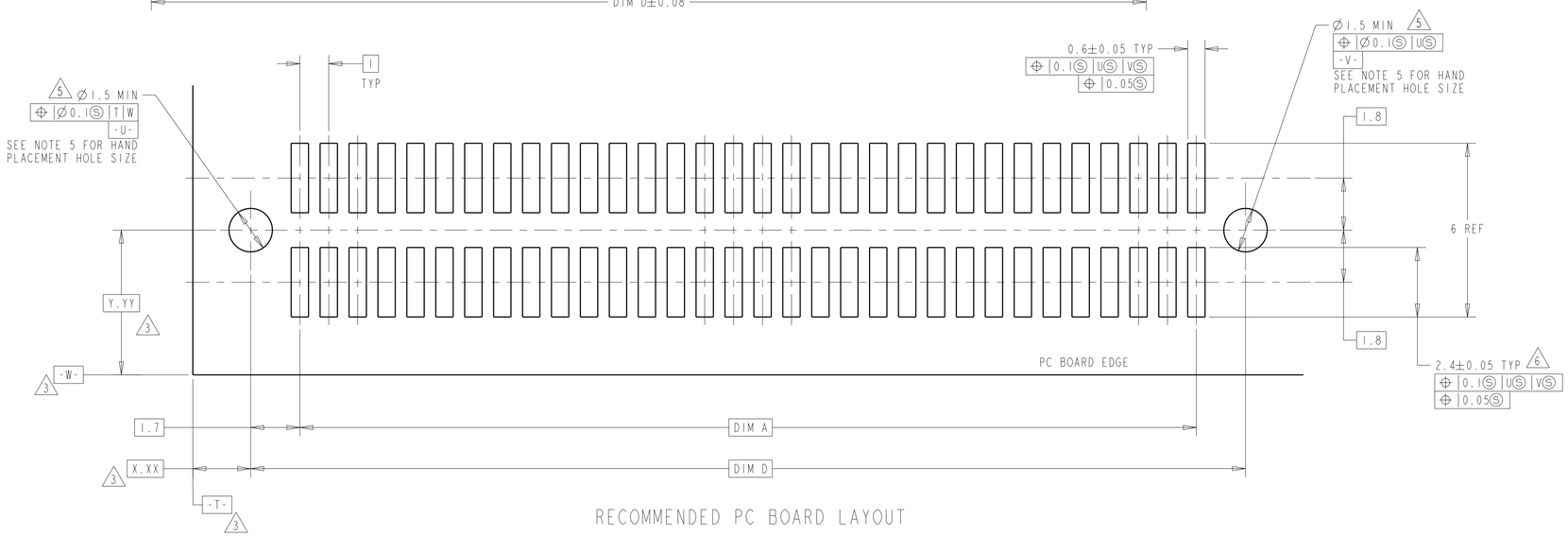

RECOMMENDED PC BOARD LAYOUT

POST STYLE	FINISH	DIM D	DIM C	DIM B	DIM A	STACK HEIGHTS	POS	AMP PART NUMBER
12	10	44.4	45.9	44.22	41	13	84	3-146895-2
12	10	34.4	35.9	34.22	31	13	64	3-146895-1
12	2	44.4	45.9	44.22	41	13	84	2-146895-2
12	2	34.4	35.9	34.22	31	13	64	2-146895-1
11	10	44.4	45.9	44.22	41	13	84	1-146895-2
11	10	34.4	35.9	34.22	31	13	64	1-146895-1
11	2	44.4	45.9	44.22	41	13	84	146895-2
11	2	34.4	35.9	34.22	31	13	64	146895-1

THIS DRAWING IS A CONTROLLED DOCUMENT FOR TYCO ELECTRONICS CORPORATION. IT IS SUBJECT TO CHANGE AND THE CONTROLLING ENGINEERING ORGANIZATION SHOULD BE CONTACTED FOR THE LATEST REVISION.

DWN D.K.SCHRUM 31JUL98
CHK CHAD BAKER 31JUL98
APVD -

Tyco Electronics
Tyco Electronics Corporation
Harrisburg, PA 17105-3608

DIMENSIONS: mm

TOLERANCES UNLESS OTHERWISE SPECIFIED:
0 PLC ±-
1 PLC ±-
2 PLC ±0.03
3 PLC ±0.003
4 PLC ±-
ANGLES ±0°30'

MATERIAL 1

FINISH SEE TABLE

PRODUCT SPEC 502-1079
APPLICATION SPEC 114-25045
WEIGHT -

NAME RECEPTACLE ASSY, W/ VACUUM COVER, 1.0mm FH(IEEE 1386) CONNECTOR

SIZE	CAGE CODE	DRAWING NO	RESTRICTED TO
A1	00779	C-146895	-

CUSTOMER DRAWING | SCALE 10:1 | SHEET 1 OF 1 | REV K1

AMP 4805 REV 31MAR2000

Downloaded From Oneyac.com

Pro/ENGINEER DRAWING

单击下面可查看定价，库存，交付和生命周期等信息

>>TE Connectivity(泰科)

Downloaded From Oneyac.com