THIS DRAWING IS UNPUBLISHED. RELEASED FOR PUBLICATION -,- .
© COPYRIGHT - BY TYCO ELECTRONICS CORPORATION. ALL RIGHTS RESERVED.

LOC	DIST
AF	50

REVISIONS

P	LTR	DESCRIPTION	DATE	DWN	APVD
	B2	REV PER ECR 07-002947	14MAR07	JR	KR

1 SPECIFICATION: TAB BLADE 2mm X 0.8mm OTHER SIZES MAY BE ACCOMMODATED, CONSULT TYCO ELECTRONICS FOR APPROVAL.

2 POCKET RECOMMENDATION: 1601441.

3 TERMINALS SUPPLIED ON REELS CAN BE SUPPLIED LOOSE PIECE.

4 .000080-.000150 [0.002032-0.00381] POST-TIN PLATE OVER .000050-.000100 [0.00127-0.00254] NICKEL UNDERPLATE.

5 CARRIER STRIP THICKNESS OVER THREE TERMINALS INCLUSIVE NOT TO EXCEED .024 [0.61] MAX.

6 NON-ACCUMLATING TOLERANCE. PITCH OVER 10 GAPS TO BE 3.103+.003/-.000 [78.816+0.076/-0.000] MEASURED AT CARRIER STRIP.

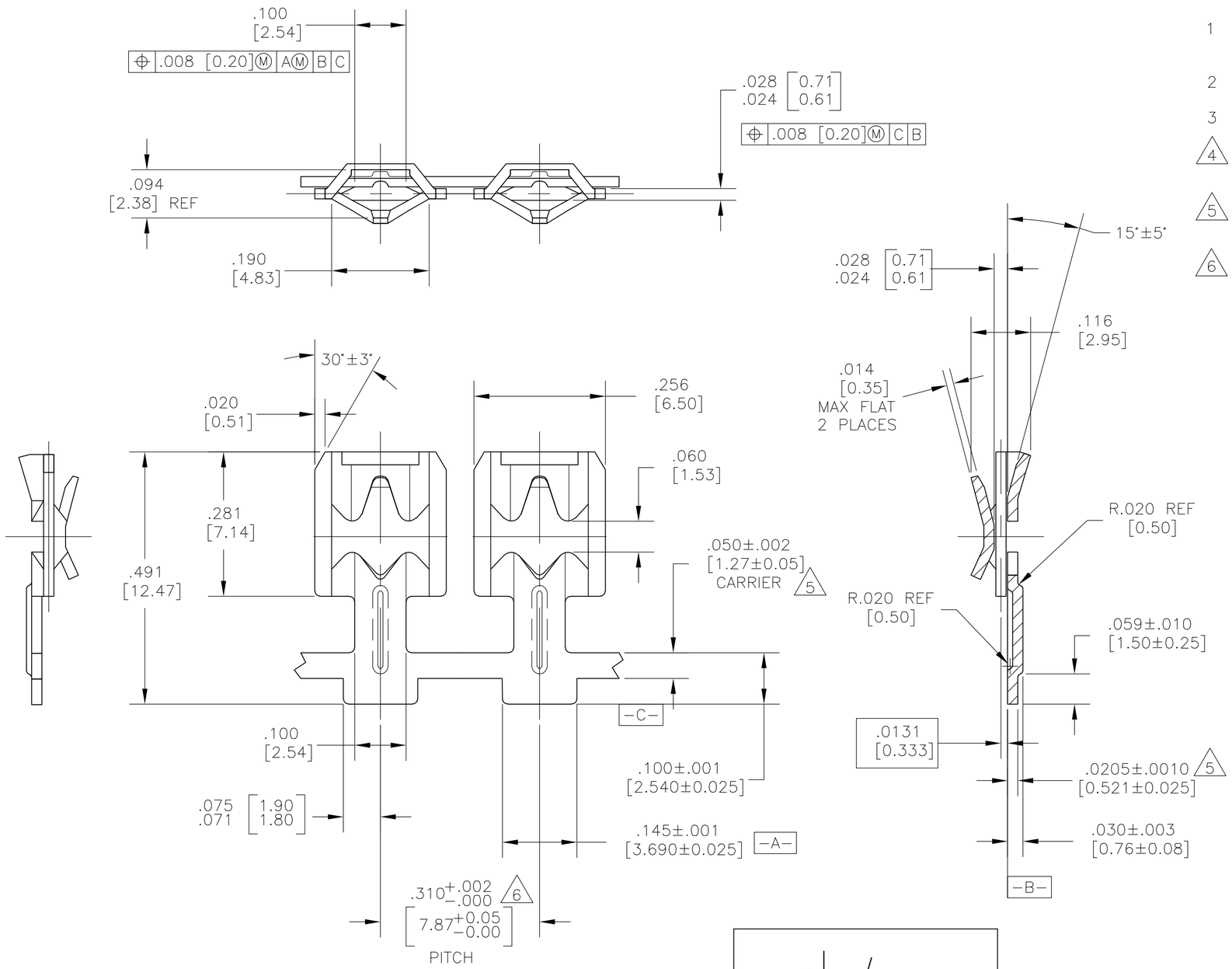

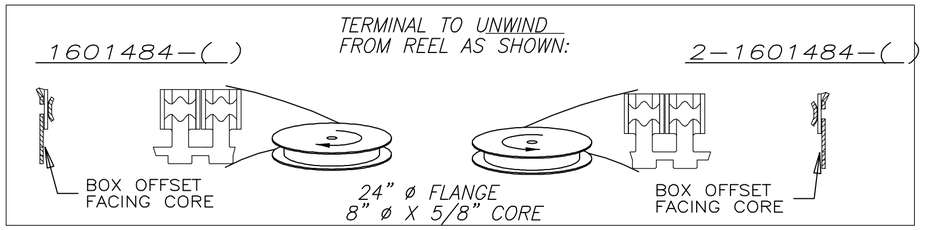

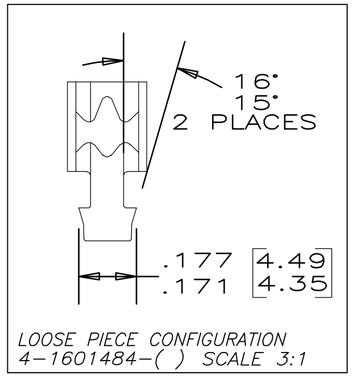

MATERIAL	REELING	FINISH	PART NUMBER
H02 C510 PHOSPHOR BRONZE	MASONITE	5	1601484-1

THIS DRAWING IS A CONTROLLED DOCUMENT.

DIMENSIONS: INCHES

TOLERANCES UNLESS OTHERWISE SPECIFIED:

0 PLC	±	-
1 PLC	±	-
2 PLC	±	.01[0.25]
3 PLC	±	.005[0.13]
4 PLC	±	-
ANGLES		± 2°

MATERIAL: SEE TABLE

FINISH: SEE TABLE

DWN 28JUL2005 MICHAEL S. FEHER
CHK 01SEP2005 KURT A. RANDOLPH
APVD 01SEP2005 KURT A. RANDOLPH
PRODUCT SPEC —
APPLICATION SPEC —
WEIGHT —

tyco Electronics — Tyco Electronics Corporation, Harrisburg, PA 17105-3608

NAME: 2.0mm X 0.8mm BLADE RECEPTACLE TERMINAL

SIZE	CAGE CODE	DRAWING NO	RESTRICTED TO
A2	00779	C-1601484	—

CUSTOMER DRAWING | SCALE 6:1 | SHEET 1 OF 1 | REV B2

1601484

AMP 1471-9 REV 31MAR2000

Downloaded From Oneyac.com

单击下面可查看定价，库存，交付和生命周期等信息

>>TE Connectivity(泰科)

Downloaded From Oneyac.com