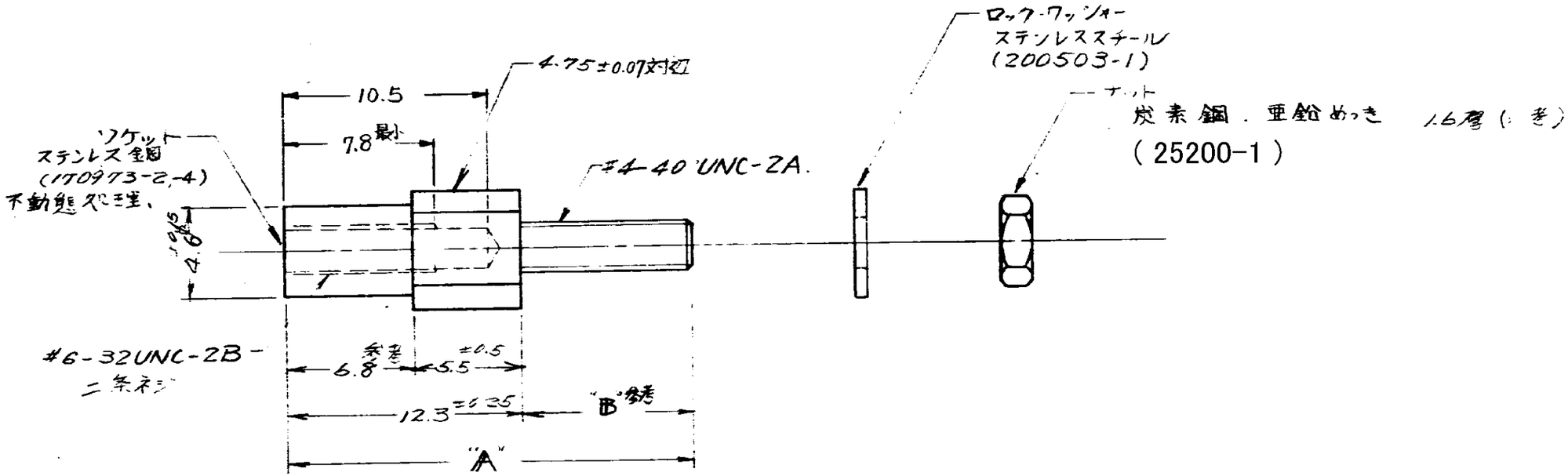

170987 -2	24.3	12.0
170987 -1	21.3	9.0
部品番号	"A"	"B"

-1：類似 NO. 200875-1

F	REVISED FJD0-0320-04	Y.Y	D.M	13SEP '04
E	ADDED PER ECN J83-6801			
E	REDRAWN WITH CHANGE	S.M		
D	ECN J0-3956			
C				
C	RE			
B	REVISED			
A	REVISED			
C	RELEASED			

C-170987

REQUIRED PER ASSEMBLY

DESCRIPTION

番号 NUMBER: 71

名称 NAME: 固定ジャックスクリュー(黒)

備考 REMARKS

© 1971 BY AMP Japan, Ltd. ALL RIGHTS RESERVED. AMP PRODUCTS COVERED BY PATENTS AND OR PATENTS PENDING

参考図面

上参照

上参照

DR. 3/17 '80

CHK. 3-22-80

DE 3/17 '80

APP. 3/24/80

TOLERANCE EXCEPT AS NOTED

SCALE 4-1

tyco Electronics

Tyco Electronics AMP K.K Kawasaki, Japan

CODE SIZE J B C-170987 REV. F

Downloaded From Oneyac.com

单击下面可查看定价，库存，交付和生命周期等信息

>>TE Connectivity(泰科)

Downloaded From Oneyac.com