DRAWING MADE IN THIRD ANGLE PROJECTION

© COPYRIGHT 1976 BY AMP INCORPORATED, HARRISBURG, PA.
ALL INTERNATIONAL RIGHTS RESERVED. AMP INCORPORATED PRODUCTS COVERED BY U. S. AND FOREIGN PATENTS AND/OR PATENTS PENDING.
DISCLOSED, USED, REPRODUCED OR TRANSMITTED WITHOUT WRITTEN PERMISSION OF AMP INCORPORATED.

LOC	DIST
R	39

REVISIONS

P	F	ZONE	LTR	DESCRIPTION	DATE	APPROVED
	✓		0	RELEASED WAS 5048-677	4/2/76	

PART NUMBER	KEYING POSITION
207306-1	01
207306-2	02
207306-3	03
207306-4	04
207306-5	05
207306-6	06
207306-7	07
207306-8	08
207306-9	09

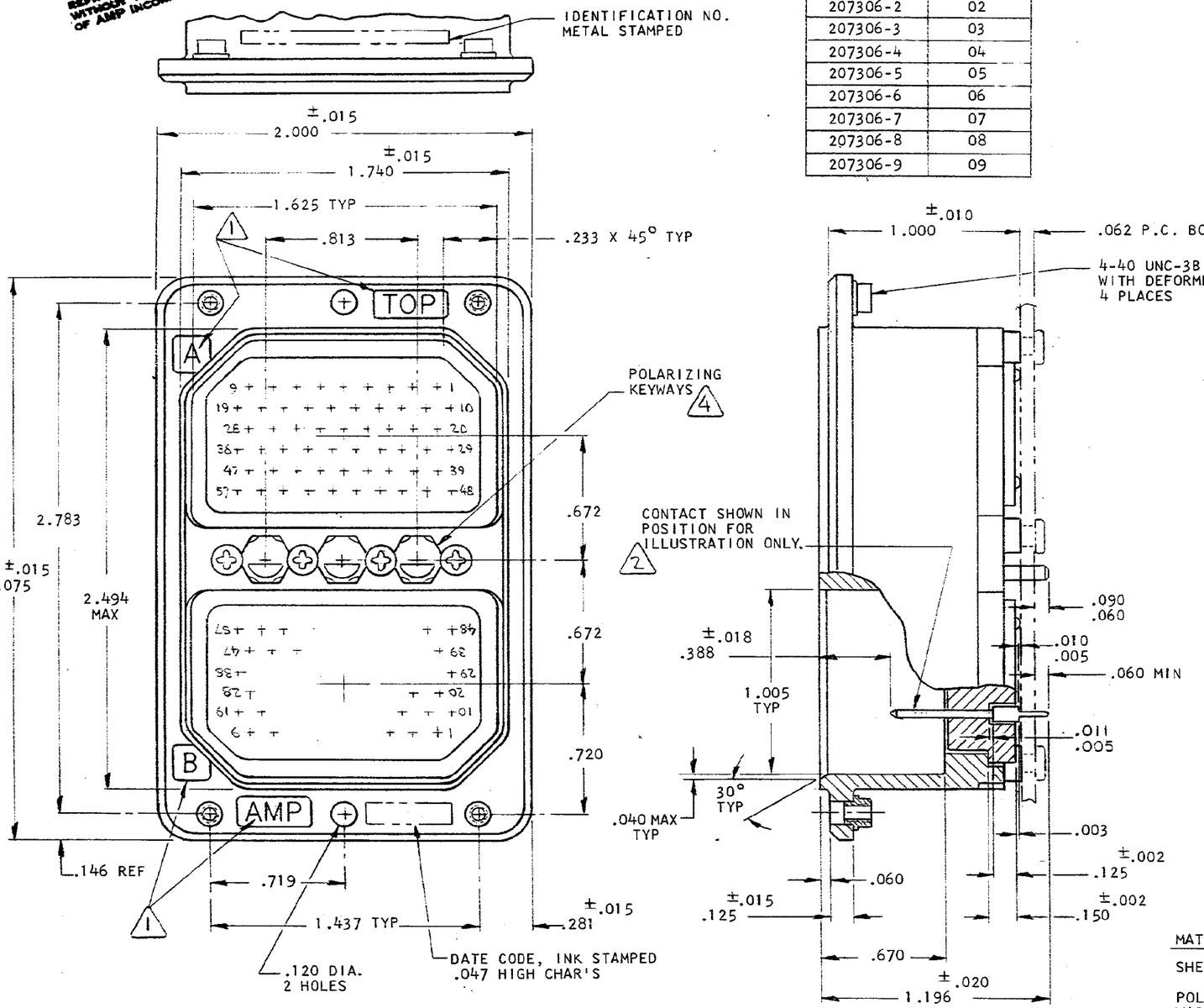

MATERIAL & FINISH

SHELL: DIE CAST ALUM. ALLOY PER QQ-A-591, COMP. 10,
FINISH, CAD PLATED YELLOW CHROMATE PER QQ-P-416, TYPE 1, CLASS 2.
POLARIZING KEYING INSERTS & SCREWS: STAINLESS STEEL.
WASHERS: PHENOLIC.
INSULATORS, HARD: EPOXY.

1. CHAR'S ARE .125 HIGH, FLUSH TO DEPRESSED.
2. FOR SHIPMENT, CONTACTS ARE INSTALLED IN INSULATOR & PROTECTOR COVER PLACED OVER CONTACTS & IS INCLUDED IN A CONTAINER WITHIN THE CONNECTOR PACKAGE.
3. PARTS PACKAGED UNASSEMBLED.
4. FOR KEYING POSITIONS SEE DWG 204014.

PART NO

UNLESS OTHERWISE SPECIFIED DIMENSIONS ARE IN INCHES.
TOLERANCES ON:
DECIMALS ±.005
ANGLES ± 2°

MATERIAL: SEE CALLOUT

FINISH: SEE CALLOUT

CONTRACT NO
DR 4/2/76
CHK 4-6-76
APPD 4.8.76
APPD 4.8.76
DSGN APPD
OTHER APPD

AMP INCORPORATED Harrisburg, Pa.

NAME: RECEPTACLE CONNECTOR ASSY RACK & PANEL AM2R57P57P

SIZE	CODE IDENT NO	DRAWING NO
C	00779	207306

SCALE — | "AM" | SHEET 1 OF 1

CUSTOMER DRAWING

AMP 1471-6 (7-73)

Downloaded From Oneyac.com

单击下面可查看定价，库存，交付和生命周期等信息

>>TE Connectivity(泰科)

Downloaded From Oneyac.com