THIS DRAWING IS UNPUBLISHED. RELEASED FOR PUBLICATION -.- .
© COPYRIGHT – TE Connectivity Ltd. ALL RIGHTS RESERVED.

REVISIONS					
P	LTR	DESCRIPTION	DATE	DWN	APVD
	B	ECO-18-014918	19AUG2019	RR	SH

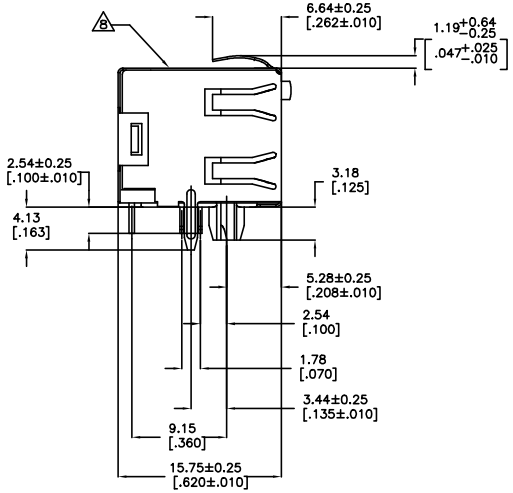

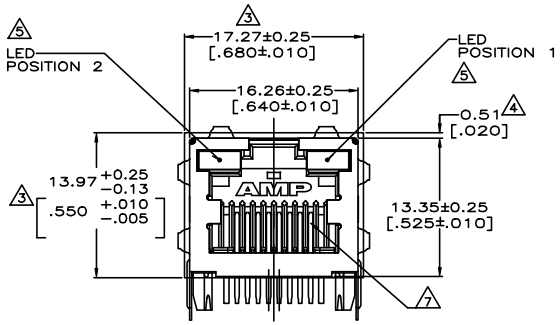

1. MATERIAL: HOUSING – HIGH TEMPERATURE THERMOPLASTIC, BLACK, UL94V-0.
   TERMINALS – 0.36[.014] THICK PHOS BRONZE PLATED WITH 3.81um[.000150] MINIMUM THICK TIN-LEAD IN SOLDER AREA. 1.27um [.000050] MINIMUM GOLD IN LOCALIZED PLATE AREA. ENTIRE TERMINAL PLATED WITH 1.27um [.000050] MINIMUM THICK NICKEL.
   SHIELD – 0.196[.0077] THICK COPPER ZINC ALLOY PREPLATED WITH 1.27um[.000050] MINIMUM SATIN NICKEL WITH 2.03um[.000080] MINIMUM TIN POST DIPPED ON PCB GROUND TABS.
   LIGHT EMITTING DIODE (LED) – DIFFUSED EPOXY LENS, 0.51 x 0.51[.020 x .020] CARBON STEEL WIREFRAME LEADS PLATED WITH 8.89um[.000350] TIN/COPPER OVER 2.03[000080] SILVER OVER 1.02um[.000040] NICKEL UNDERPLATE OVER 1.02um[.000040] COPPER UNDERPLATE.
2. JACK CAVITY CONFORMS TO FCC RULES AND REGULATIONS PART 68, SUBPART F.

3 SUGGESTED PANEL OPENING DIMENSIONS.

4 SUGGESTED CLEARANCE BETWEEN TOP OF CONNECTOR AND TOP PANEL OPENING.

5 SEE TABLE FOR COLOR OF LEDS AND NUMBER REQUIRED.

6. THIS MODULAR JACK WITH INTEGRATED LED IS NOT IR REFLOW SOLDERING PROCESS COMPATIBLE.

7 CONTACT AREA LUBRICATED WITH BELLCORE APPROVED LUBRICANT. TECHNICAL REFERENCE GR-1217-CORE, ISSUE 1, NOVEMBER 1995

8 MANUFACTURING DATE CODE:
LOCATED APPROX. AS SHOWN.
FIRST 2 DIGITS = LAST 2 DIGITS OF YEAR.
NEXT 2 DIGITS = MANUFACTURING WORK WEEK.
LAST DIGIT = DAY OF WEEK WITH SUNDAY = 1.

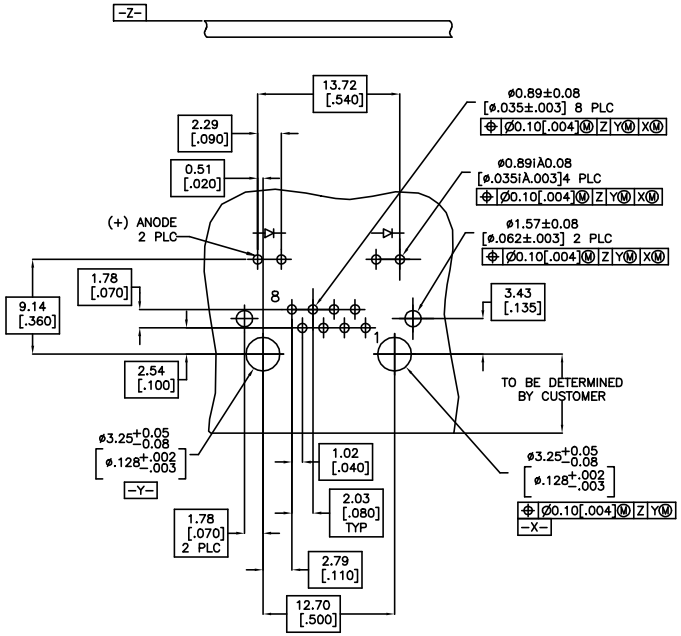

RECOMMENDED PRINTED CIRCUIT BOARD LAYOUT
(COMPONENT SIDE)

OBSOLETED	GREEN	YELLOW	1932112-1
	POSITION 2	POSITION 1	PART NUMBER
	INDICATOR COLOR		

THIS DRAWING IS A CONTROLLED DOCUMENT.

DIMENSIONS: mm [INCHES]

TOLERANCES UNLESS OTHERWISE SPECIFIED: 0 PLC ± – ; 1 PLC ± – ; 2 PLC ± 0.25[.01] ; 3 PLC ± 0.13[.005] ; 4 PLC ± – ; ANGLES ± –

MATERIAL: SEE NOTE 1

FINISH: SEE NOTE 1

DWN D.ZHU 31MAY2006
CHK W.COREL 31MAY2006
APVD S.YAO 31MAY2006

PRODUCT SPEC 108-1163-4
APPLICATION SPEC 114-2154
WEIGHT 0.000000

CUSTOMER DRAWING

TE Connectivity

NAME: INVERTED MODULAR JACK ASSEMBLY, 1X1, SHIELDED, PANEL GROUND, LED

SIZE A1 | CAGE CODE 00779 | DRAWING NO C-1932112 | RESTRICTED TO –

SCALE 4:1 | SHEET 1 OF 1 | REV B

4805 (1/15)

Downloaded From Oneyac.com

单击下面可查看定价，库存，交付和生命周期等信息

>>TE Connectivity(泰科)

Downloaded From Oneyac.com