THIS DRAWING IS UNPUBLISHED. RELEASED FOR PUBLICATION -,- .
© COPYRIGHT - By - ALL RIGHTS RESERVED.

REVISIONS					
P	LTR	DESCRIPTION	DATE	DWN	APVD
	U2	REVISED PER ECR-15-014064	04MAR2016	NK	NL

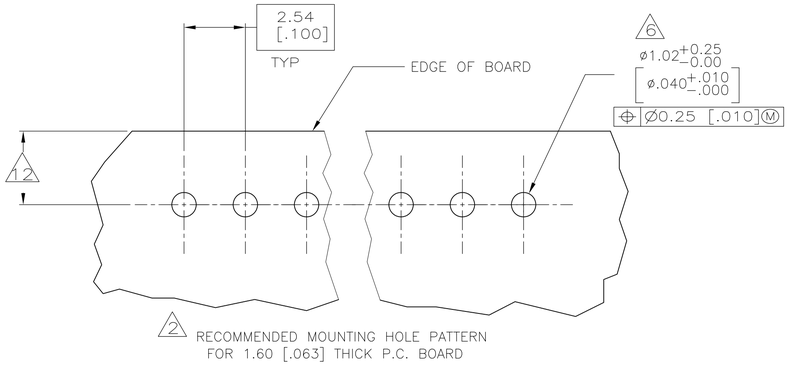

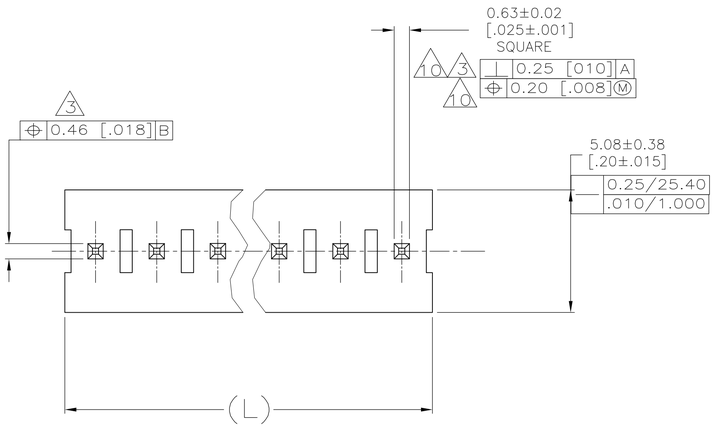

1. POST TO WITHSTAND 13 NEWTONS (3 LBS) MINIMUM AXIAL FORCE IN BOTH DIRECTIONS SHOWN WITHOUT DISLODGING.
2. TOLERANCES APPLY TO SOLDER SIDE OF BOARD.
3. MEASURED AT —A—
4. PLASTIC FLASH PERMITTED IN THIS AREA.
5. PARTS COMPLY WITH AMP SOLDERABILITY SPEC. NO. 109-11-2.
6. ONE HOLE MAY BE UNDERSIZED 0.81-0.89 [.032-.035] DIA. FOR ASSEMBLY RETENTION DURING WAVE SOLDERING.
7. MATERIAL: HEADER-THERMOPLASTIC POLYESTER 94V-0 (NATURAL)
   POST-COPPER ALLOY
   FINISH-USE PLATING NOTES 13 & 14 FOR -2 THRU -28 AND NOTES 13 & 15 FOR -32 THRU -58
8. COORDINATE DIMENSION APPLIES FROM CENTER OF ACTUAL FEATURE.
9. PLASTIC BURRS CAUSED BY CUT-OFF TOOLING ARE PERMITTED WITHIN THE MAXIMUM TOLERANCE ENVELOPE.
10. POSTS TO BE MEASURED WHEN STRIP IS HELD FLAT.
11. POST MUST WITHSTAND TWO 90° BENDS AGAINST EXTRUSION WITHOUT BREAKING.
12. DIMENSION SHOULD BE 3.05 [.120] MIN WHEN MATING WITH A MTA-100 CONNECTOR ASSEMBLY OR A CST-100 CONNECTOR ASSEMBLY.
13. PLATING: GOLD PLATE AREA, 0.00038 [.000015] GOLD OR 0.00008 [.000003] MIN GOLD FLASH OVER 0.00030 [.000012] PALLADIUM NICKEL, PER TE CONNECTIVITY'S DISCRETION, ALL SIDES, OVER NICKEL UNDERPLATE, .00127 [.000050] MIN, ALL SIDES AND ENTIRE LENGTH OF POST.
14. PLATING: BRIGHT TIN/LEAD (93/7) PLATE AREA, 0.00381-0.00889 [.000150-.000350] THICK, ALL FOUR SIDES 3.56 [.140] MINIMUM.
15. PLATING: MATTE TIN PLATE AREA,0.00381-0.00889[.000150-.000350] THICK, ALL FOUR SIDES 3.56 [.140] MINIMUM.
16. OBSOLETE PARTS: OBSOLETE CIS STREAMLINING PER D.RENAUD/D.SINISI

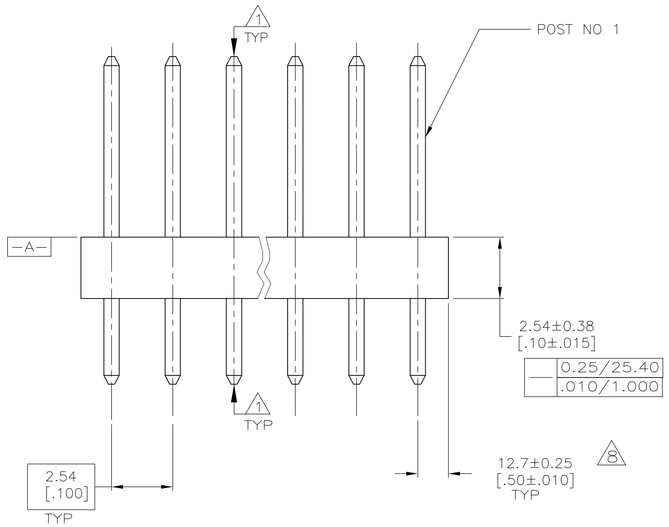

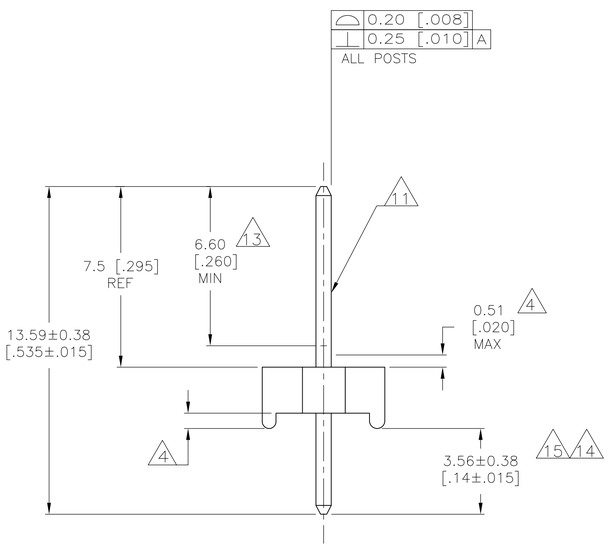

	DIM (L)	NO.OF POSN	ASSEMBLY			DIM (L)	NO.OF POSN	ASSEMBLY	
LEAD FREE	71.12 [2.800]	28	5-641122-8	16	CONTAINS LEAD	71.12 [2.800]	28	~~2-641122-8~~	SUPERSEDED BY 5-641122-8
	68.58 [2.700]	27	5-641122-7	16		68.58 [2.700]	27	~~2-641122-7~~	SUPERSEDED BY 5-641122-7
	66.04 [2.600]	26	5-641122-6	16		66.04 [2.600]	26	~~2-641122-6~~	SUPERSEDED BY 5-641122-6
	63.50 [2.500]	25	5-641122-5	16		63.50 [2.500]	25	~~2-641122-5~~	SUPERSEDED BY 5-641122-5
	60.96 [2.400]	24	5-641122-4	16		60.96 [2.400]	24	~~2-641122-4~~	SUPERSEDED BY 5-641122-4
	58.42 [2.300]	23	5-641122-3	16		58.42 [2.300]	23	~~2-641122-3~~	SUPERSEDED BY 5-641122-3
	55.88 [2.200]	22	5-641122-2	16		55.88 [2.200]	22	~~2-641122-2~~	SUPERSEDED BY 5-641122-2
	53.34 [2.100]	21	5-641122-1	16		53.34 [2.100]	21	~~2-641122-1~~	SUPERSEDED BY 5-641122-1
	50.80 [2.000]	20	5-641122-0	16		50.80 [2.000]	20	~~2-641122-0~~	SUPERSEDED BY 5-641122-0
	48.26 [1.900]	19	4-641122-9	16		48.26 [1.900]	19	~~1-641122-9~~	SUPERSEDED BY 4-641122-9
	45.72 [1.800]	18	4-641122-8	16		45.72 [1.800]	18	~~1-641122-8~~	SUPERSEDED BY 4-641122-8
	43.18 [1.700]	17	4-641122-7	16		43.18 [1.700]	17	~~1-641122-7~~	SUPERSEDED BY 4-641122-7
	40.64 [1.600]	16	4-641122-6	16		40.64 [1.600]	16	~~1-641122-6~~	SUPERSEDED BY 4-641122-6
	38.10 [1.500]	15	4-641122-5	16		38.10 [1.500]	15	~~1-641122-5~~	SUPERSEDED BY 4-641122-5
	35.56 [1.400]	14	4-641122-4	16		35.56 [1.400]	14	~~1-641122-4~~	SUPERSEDED BY 4-641122-4
	33.02 [1.300]	13	4-641122-3	16		33.02 [1.300]	13	~~1-641122-3~~	SUPERSEDED BY 4-641122-3
	30.48 [1.200]	12	4-641122-2	16		30.48 [1.200]	12	~~1-641122-2~~	SUPERSEDED BY 4-641122-2
	27.94 [1.100]	11	4-641122-1	16		27.94 [1.100]	11	~~1-641122-1~~	SUPERSEDED BY 4-641122-1
	25.40 [1.000]	10	4-641122-0	16		25.40 [1.000]	10	~~1-641122-0~~	SUPERSEDED BY 4-641122-0
	22.86 [.900]	9	3-641122-9	16		22.86 [.900]	9	~~641122-9~~	SUPERSEDED BY 3-641122-9
	20.32 [.800]	8	3-641122-8	16		20.32 [.800]	8	~~641122-8~~	SUPERSEDED BY 3-641122-8
	17.78 [.700]	7	3-641122-7	16		17.78 [.700]	7	~~641122-7~~	SUPERSEDED BY 3-641122-7
	15.24 [.600]	6	3-641122-6	16		15.24 [.600]	6	~~641122-6~~	SUPERSEDED BY 3-641122-6
	12.70 [.500]	5	3-641122-5	16		12.70 [.500]	5	~~641122-5~~	SUPERSEDED BY 3-641122-5
	10.16 [.400]	4	3-641122-4			10.16 [.400]	4	641122-4	
	7.62 [.300]	3	3-641122-3	16		7.62 [.300]	3	~~641122-3~~	SUPERSEDED BY 3-641122-3
	5.08 [.200]	2	3-641122-2	16		5.08 [.200]	2	~~641122-2~~	SUPERSEDED BY 3-641122-2

THIS DRAWING IS A CONTROLLED DOCUMENT.

DIMENSIONS: mm [INCHES]

TOLERANCES UNLESS OTHERWISE SPECIFIED:
0 PLC ±
1 PLC ±
2 PLC ± 0.13 [.025]
3 PLC ±
4 PLC ±
ANGLES ±

MATERIAL 7 FINISH 7

DWN	S. HOOVER	26-JAN-2005
CHK	D. BOSSI	26-JAN-2005
APVD	D. BOSSI	26-JAN-2005
PRODUCT SPEC	–	
APPLICATION SPEC	–	
WEIGHT	–	

TE Connectivity

NAME: MTA- .100 HDR ASSY, PLAIN, .025 SQUARE STRAIGHT POST .000015 GOLD PLATED

SIZE	CAGE CODE	DRAWING NO	RESTRICTED TO
A1	00779	C-641122	

CUSTOMER DRAWING | SCALE 8:1 | SHEET 1 OF 1 | REV U2

4805 (1/15)

Downloaded From Oneyac.com

单击下面可查看定价，库存，交付和生命周期等信息

>>TE Connectivity(泰科)

Downloaded From Oneyac.com