THIS DRAWING IS UNPUBLISHED. RELEASED FOR PUBLICATION 20
© COPYRIGHT 20 BY TYCO ELECTRONICS CORPORATION. ALL RIGHTS RESERVED.

LOC	DIST
F	00

REVISIONS

P	LTR	DESCRIPTION	DATE	DWN	APVD
	B	ECR 07-025006	24OCT2007	JT	GR

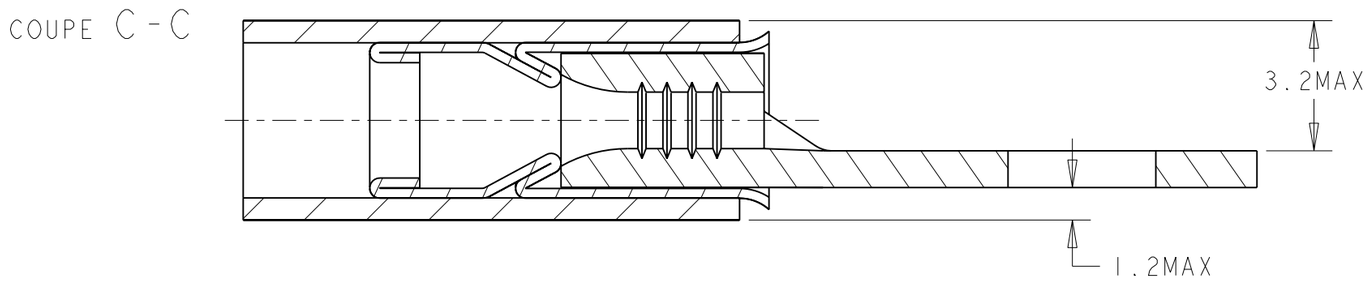

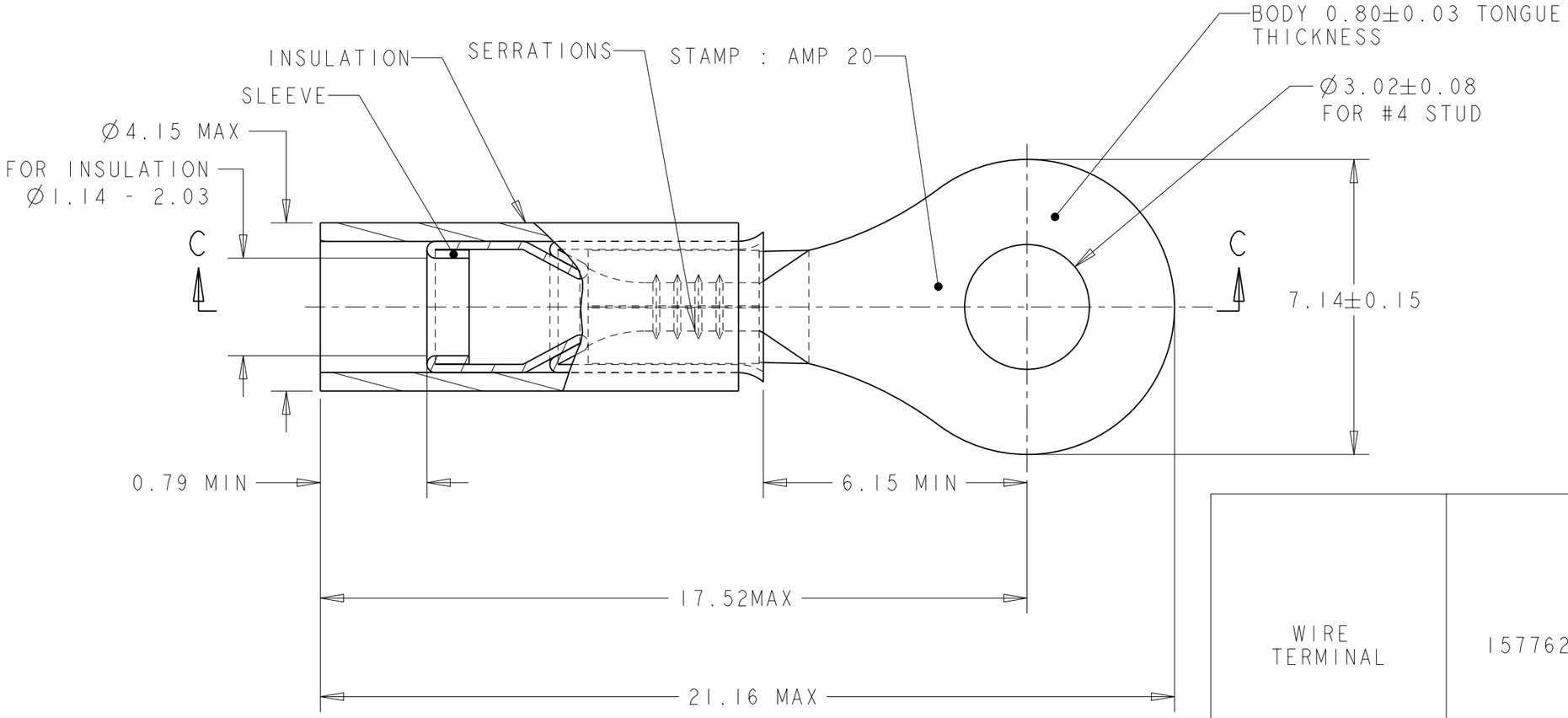

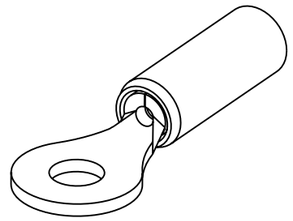

SCALE 3:1

WIRE TERMINAL	1577622-1	BODY : COPPER ANNEALED FINISH : NICKEL PLATED
		SLEEVE : COPPER ANNEALED FINISH : NICKEL PLATED
		INSULATION : PEEK COLOR : GREY
DESCRIPTION	PART NUMBER	MATERIAL & FINISH

THIS DRAWING IS A CONTROLLED DOCUMENT FOR TYCO ELECTRONICS CORPORATION. IT IS SUBJECT TO CHANGE AND THE CONTROLLING ENGINEERING ORGANIZATION SHOULD BE CONTACTED FOR THE LATEST REVISION.

DIMENSIONS: mm

TOLERANCES UNLESS OTHERWISE SPECIFIED:

0 PLC	±-
1 PLC	±0.3
2 PLC	±-
3 PLC	±-
4 PLC	±-
ANGLES	±5

MATERIAL SEE TABLE

FINISH SEE TABLE

DWN JJ. DESPRETZ 02NOV2005
CHK G.ROBERT 02NOV2005
APVD Y.PETRONIN 02NOV2005
PRODUCT SPEC 108-15356
APPLICATION SPEC 114-15102
WEIGHT 0,74 gr

tyco Electronics

TYCO ELECTRONICS France SAS
BP 30039, 95301 CERGY-PONTOISE Cedex

NAME TERMINAL, PEEK PIDG STRATO, 20 AWG
-

SIZE	CAGE CODE	DRAWING NO	RESTRICTED TO
A3	00779	C-1577622	-

CUSTOMER DRAWING | SCALE 8:1 | SHEET 1 OF 1 | REV B

AMP 1470-19 REV 31MAR2000

Downloaded From Oneyac.com

Pro/ENGINEER DRAWING

单击下面可查看定价，库存，交付和生命周期等信息

>>TE Connectivity(泰科)

Downloaded From Oneyac.com