THIS DRAWING IS UNPUBLISHED. RELEASED FOR PUBLICATION -,- .
© COPYRIGHT - By - ALL RIGHTS RESERVED.

LOC	DIST
CM	00

REVISIONS

P	LTR	DESCRIPTION	DATE	DWN	APVD
	A1	REVISED PER ECO-11-004917	11MAR11	RK	HMR

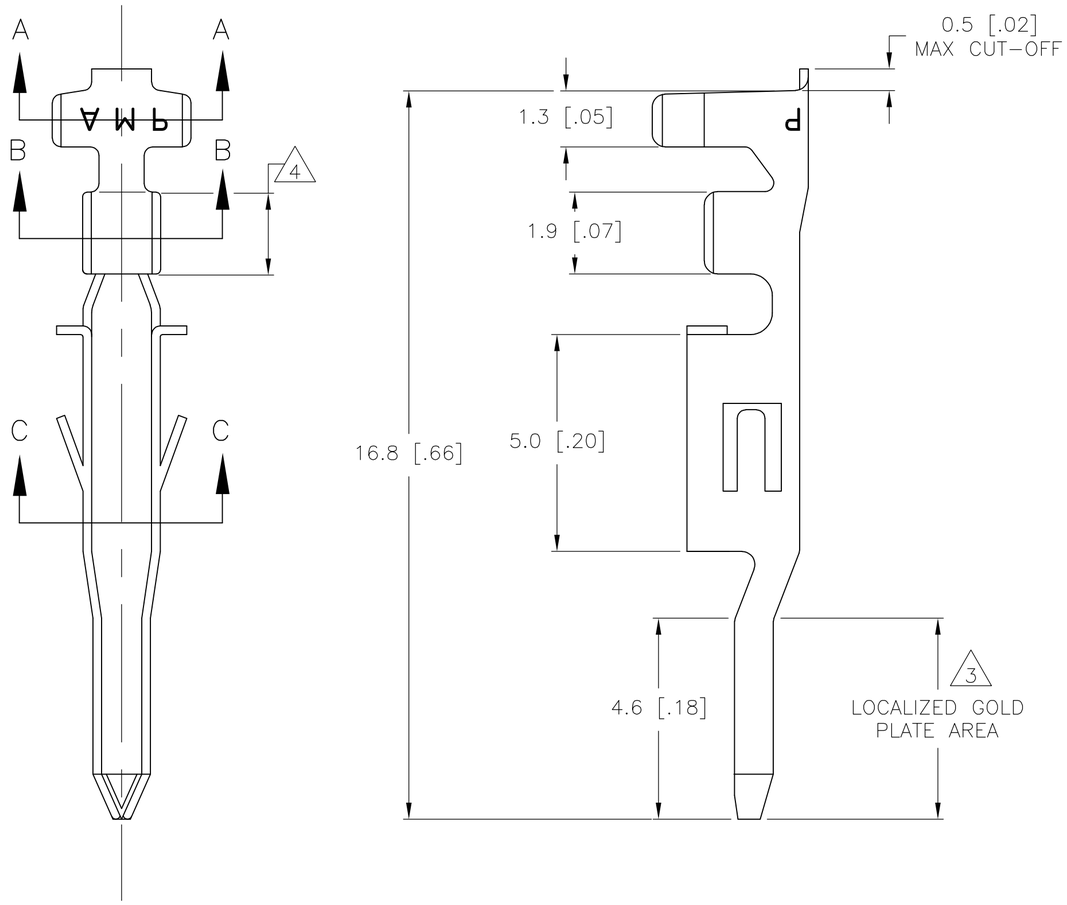

1 WIRE RANGE: 0.13–0.32mm² (26–22 AWG).

2 INSULATION RANGE: 1.20–1.75 DIA.

3 FINISH: 0.76μm MINIMUM GOLD IN LOCALIZED GOLD PLATE AREA OVER 1.27μm MINIMUM NICKEL

4 FINISH: 2.54μm MINIMUM TIN IN LOCALIZED TIN PLATE AREA.

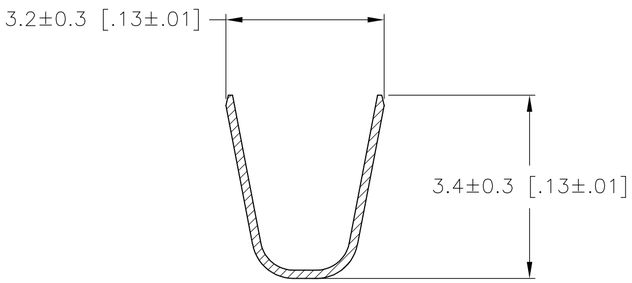

SECTION A–A

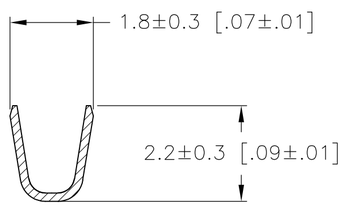

SECTION B–B

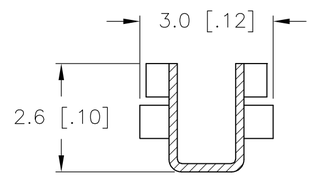

SECTION C–C

FINISH:	MATERIAL:	PART NO.
3 4	PHOS. BRZ.	1586316–4
PRE–TIN	PHOS. BRZ.	1586316–3
3 4	BRASS	1586316–2
PRE–TIN	BRASS	1586316–1

THIS DRAWING IS A CONTROLLED DOCUMENT.

DIMENSIONS: mm [INCHES]

TOLERANCES UNLESS OTHERWISE SPECIFIED:
0 PLC ±
1 PLC ± 0.3[.01]
2 PLC ± 0.15 [.006]
3 PLC ± 0.050 [.0020]
4 PLC ±
ANGLES ±

MATERIAL

FINISH

DWN	S. HOOVER	14–OCT–2003
CHK	D. COLEY	14–OCT–2003
APVD	D. COLEY	14–OCT–2003
PRODUCT SPEC		
APPLICATION SPEC		
WEIGHT		

TE Connectivity

NAME: TERMINAL LOOSE PIECE, PIN VAL–U–LOK(TM)

SIZE	CAGE CODE	DRAWING NO	RESTRICTED TO
A2	00779	C–1586316	—

CUSTOMER DRAWING | SCALE 10:1 | SHEET 1 OF 1 | REV A1

1586316

Downloaded From Oneyac.com

单击下面可查看定价，库存，交付和生命周期等信息

>>TE Connectivity(泰科)

Downloaded From Oneyac.com