THIS DRAWING IS UNDER TYCO
VERTRAULICH UNVERVIELFÄLTIGE ZEICHNUNG
(C) COPYRIGHT 2001 BY TYCO ELECTRONICS CORPORATION. ALL RIGHTS RESERVED
VERVIELFÄLTIGUNG UND WEITERGABE DIESER UNTERLAGE SOWIE VERWERTUNG UND MITTEILUNG ihres INHALTS SIND NICHT GESTATTET SOWEIT NICHT AUSDRÜCKLICH GESTATTET. ZUWIDERHANDLUNGEN VERPFLICHTEN ZU SCHADENSERSATZ. ALLE RECHTE VORBEHALTEN.

| REVISIONS ÄNDERUNGEN | | | | |
|---|---|---|---|---|
| F | LTR | DESCRIPTION BESCHREIBUNG | DATE | DWN | APVD |
| | A | EG00-1208-01 | 20MAR2001 | WM | JH |
| | A1 | EG00-1209-01 | 17APR2001 | WM | JH |
| | A2 | EG00-2771-02 | 26AUG2002 | PK | JH |
| | A3 | EGA0-2146-04 | 28SEP2004 | PR | JH |

LOC A1 DIST –

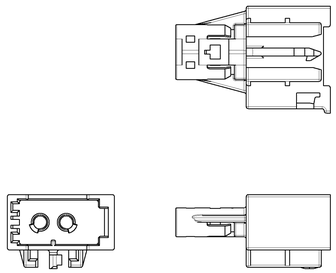

Teil mit Verbindungselement
PART WITH LOCATOR
Version 1 / VERSION 1
Standart / GENERAL 1-1394916-1

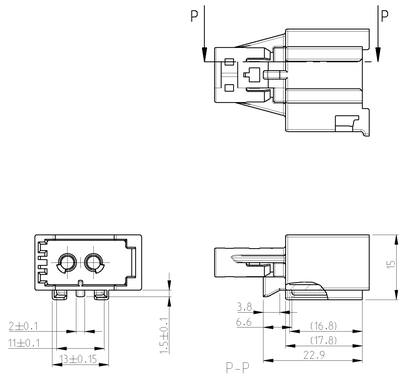


Teil mit Verbindungselement
PART WITH LOCATER
Version 2 / VERSION 2
1-1394916-2

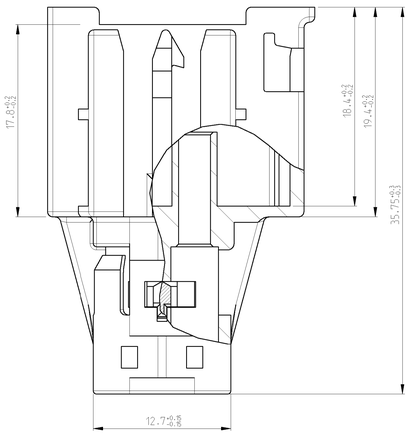


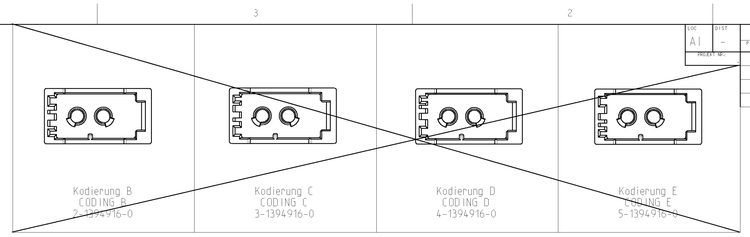


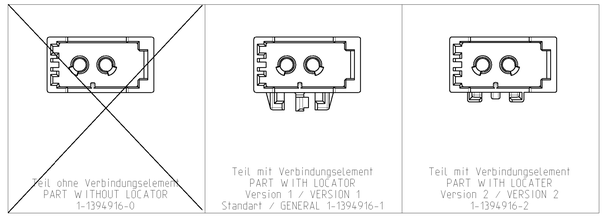


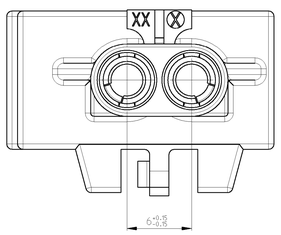


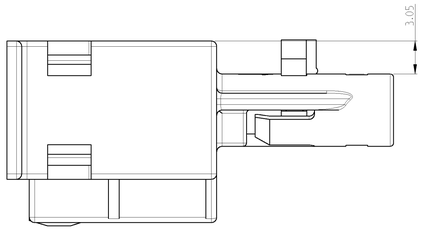


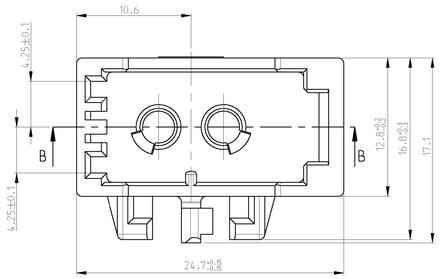


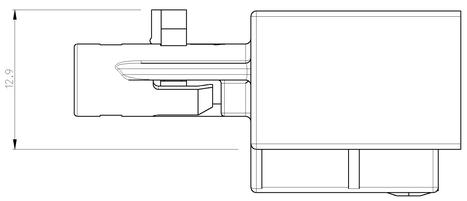


Bemerkungen / NOTES

1 Zu verwenden mit PN 1418862 Kodierung siehe Tabelle (A3)
USED WITH PN 1418862 CODING SEE TABLES

2 Kodierung A wie gezeichnet ohne Sekundaersicherung
CODING A AS SHOWN WITHOUT RETAINER

3 Anbindung mit Standartanbindung
CONNECTOR FOR GENERAL LOCATER

4 Lieferung mit Retainer in Vorraststellung
DELIVERY WITH RETAINER IN PRE LOOCKED POSITION

5 Verpackung Schuettgut im Karton
PACKING LOOSE PIECE IN CARTON

6 Massgebend ist der deutsche Text
ONLY THE GERMAN-LANGUAGE SHALL BE BINDING

7 Verbindungselement nach Zeichnung 114-18063-2
LOCATOR SHOW DRAWING 114-18063-2

8 Schnittstellenausfuehrung nach Zeichnung 114-18361-1
MATING PART EXECUTION ACC. 114-18361-1

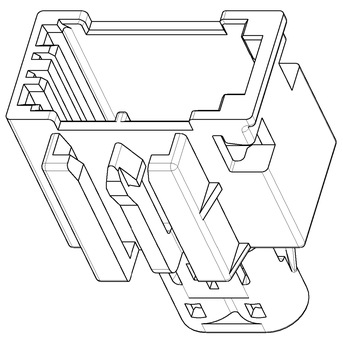

5:1

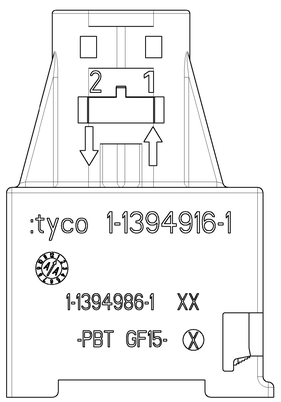

1:1

| Auslieferzustand | Endzustand |
|---|---|
| 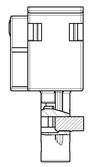 | 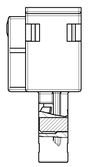 |
| Assembly<br>Sekundaersicherung in Vorraststellung<br><br>ASSY PRE-LOCKED<br>POSITION RETAINER IN PRE LOCKED POSITION | Assembly<br>Sekundaersicherung in Endraststellung<br><br>ASSY PRE-LOCKED<br>POSITION RETAINER IN LOCKED POSITION |

| LOCATOR | CUSTOMER NO | TYCO PART NO | REV. | QTY | Pos. | DESCRIPTION | COLOUR | COD. | Passend zu: SUITABLE FOR: | ITEM NO |
|---|---|---|---|---|---|---|---|---|---|---|
| Mit Verbindungselement Version 2 WITH LOCATOR VERSION 2 | - | 5-1394916-2 | A | 1 | 2 | RETAINER | BLUE | E | 5-1418862-0 (A3) | 15 |
| | | | | | 1 | INLINE CONNECTOR | - | | | |
| | - | 4-1394916-2 | A | 1 | 2 | RETAINER | BLUE | D | 4-1418862-0 | 14 |
| | | | | | 1 | INLINE CONNECTOR | - | | | |
| | - | 3-1394916-2 | A | 1 | 2 | RETAINER | BLUE | C | 3-1418862-0 | 13 |
| | | | | | 1 | INLINE CONNECTOR | - | | | |
| | - | 2-1394916-2 | A | 1 | 2 | RETAINER | BLUE | B | 2-1418862-0 | 12 |
| | | | | | 1 | INLINE CONNECTOR | - | | | |
| | - | 1-1394916-2 | A | 1 | 2 | RETAINER | BLUE | A | 1-1418862-0 | 11 |
| | | | | | 1 | INLINE CONNECTOR | BLACK | | | |
| Mit Verbindungselement Version 1 WITH LOCATOR VERSION 1 | - | 5-1394916-1 | A | 1 | 2 | RETAINER | BLUE | E | 5-1418862-0 | 10 |
| | | | | | 1 | INLINE CONNECTOR | - | | | |
| | - | 4-1394916-1 | A | 1 | 2 | RETAINER | BLUE | D | 4-1418862-0 | 9 |
| | | | | | 1 | INLINE CONNECTOR | - | | | |
| | - | 3-1394916-1 | A | 1 | 2 | RETAINER | BLUE | C | 3-1418862-0 | 8 |
| | | | | | 1 | INLINE CONNECTOR | | | | |
| | - | 2-1394916-1 | A | 1 | 2 | RETAINER | BLUE | B | 2-1418862-0 | 7 |
| | | | | | 1 | INLINE CONNECTOR | - | | | |
| | - | 1-1394916-1 | A | 1 | 2 | RETAINER | BLUE | A | 1-1418862-0 | 6 |
| | | | | | 1 | INLINE CONNECTOR | BLACK | | | |
| WITHOUT LOCATOR FOR CONNECTION | - | 5-1394916-0 | A | 1 | 2 | RETAINER | BLUE | E | 5-1418862-0 | 5 |
| | | | | | 1 | INLINE CONNECTOR | - | | | |
| | - | 4-1394916-0 | A | 1 | 2 | RETAINER | BLUE | D | 4-1418862-0 | 4 |
| | | | | | 1 | INLINE CONNECTOR | - | | | |
| | - | 3-1394916-0 | A | 1 | 2 | RETAINER | BLUE | C | 3-1418862-0 | 3 |
| | | | | | 1 | INLINE CONNECTOR | - | | | |
| | - | 2-1394916-0 | A | 1 | 2 | RETAINER | BLUE | B | 2-1418862-0 | 2 |
| | | | | | 1 | INLINE CONNECTOR | | | | |
| | - | 1-1394916-0 | A | 1 | 2 | RETAINER | BLUE | A | 1-1418862-0 | 1 |
| | | | | | 1 | INLINE CONNECTOR | BLACK | | | |

"IT IS PROHIBITED TO REPRODUCE OR DISTRIBUTE THIS DRAWING OR USE THE INFORMATION CONTAINED ON IT WITHOUT WRITTEN AUTHORITY FROM TYCO ELECTRONICS AMP GMBH. ANY INFRINGEMENT WILL BE PUNISHED AND WILL CAUSE DAMAGES."

DIMENSIONS: MILLIMETERS
PAPER DIMENSION: (11X17)
TOLERANCES UNLESS OTHERWISE SPECIFIED: ALLGEMEINTOLERANZEN
1 PLC ±
2 PLC ±
3 PLC ±
4 ANGLE ±
SURFACE FINISH: µ"
MATERIAL: PBT GF 15
FINISH/BEARBEITUNG/FARBE:

| | | |
|---|---|---|
| DWN | W. Mueller | 20MAR2001 |
| CHK | – | |
| APVD | Hahn | 20MAR2001 |
| PRODUCT SPEC. PRODUKTNR. | 108-18698 (A3) | |
| APPLICATION SPEC. ANWENDETUNGSSPEZ. | | |
| WEIGHT GEWICHT | 4.3g (Vers. 1) | |

CUSTOMER DRAWING /KUNDENZEICHNUNG

tyco Electronics

Tyco Electronics AMP GmbH
D - 64625 Bensheim

NAME: MOST 2 pol Inline Kupplung
MOST 2 POS INLINE CONNECTOR

SIZE A0 | CASE CODE 00779 | DRAWING NO (BEZ.NR.NRG.-NR.) 114-1394916 | RESTRICTED TO NUR FUER –

SCALE/MASSTAB 5:1 | SHEET/BLATT 1 | OF VON 1 | REV A3



Downloaded From Oneyac.com

单击下面可查看定价，库存，交付和生命周期等信息

>>TE Connectivity(泰科)

Downloaded From Oneyac.com