THIS DRAWING IS UNPUBLISHED. RELEASED FOR PUBLICATION -,- .
© COPYRIGHT - BY TYCO ELECTRONICS CORPORATION. ALL RIGHTS RESERVED.

LOC	DIST
GP	00

REVISIONS

P	LTR	DESCRIPTION	DATE	DWN	APVD
	B	REVISED PER ECO-08-007327	02OCT08	BM	WM

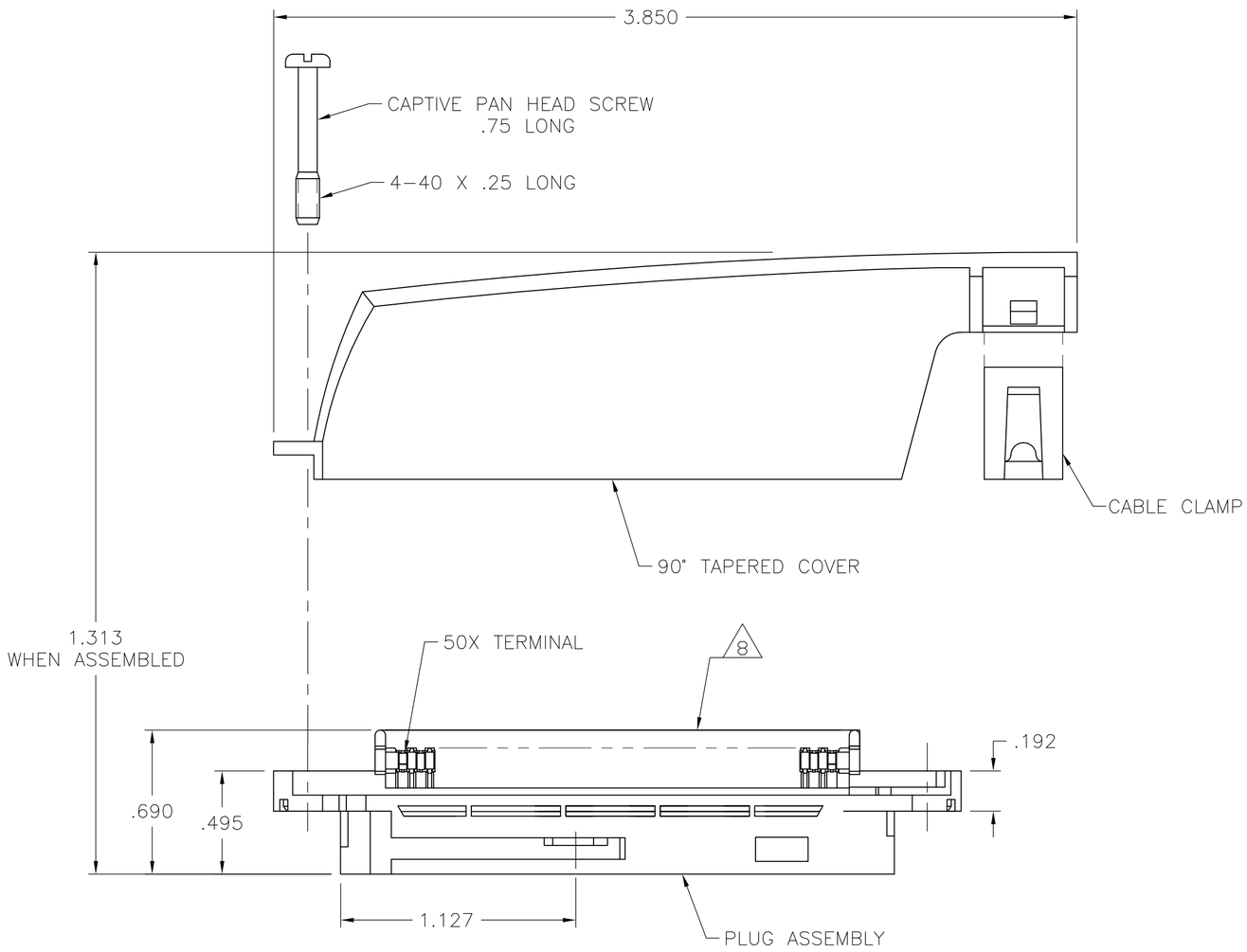

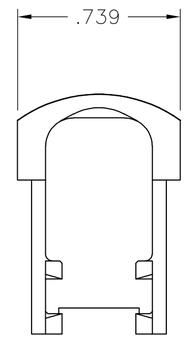

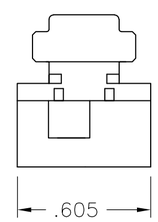

1. THE CONTACT SURFACES OF THE TERMINALS ARE COATED WITH LUBRICANT.

2. MATERIAL:
   HOUSING, COVER, AND CABLE CLAMP: THERMOPLASTIC.
   TERMINALS: PHOS BRONZE
   HARDWARE: STEEL.

3. FINISH:
   TERMINALS: .000030 MIN GOLD OR GOLD FLASH OVER PALLADIUM NICKEL PLATE .000030 MIN TOTAL ON MATING SURFACE, OVER .000050 MIN NICKEL UNDERPLATE.
   HARDWARE: ZINC PLATED.

4. THIS KIT SHIPPED UNNASSEMBLED.

5. WIRE SIZE: 22 AWG SOLID OR 22 AWG, 7 STRANDS OF COPPER CONDUCTORS. MAXIMUM INSULATION DIAMETER OF .045 IS ACCEPTABLE FOR MOST APPLICATIONS.

6. ALL DIMENSIONS SHOWN ARE MAXIMUM UNLESS OTHERWISE SPECIFIED.

7. KIT SHIPPED IN POLY BAG FORM.

8. CORING MAY OR MAY NOT APPEAR AND IS AT THE DISCRETION OF AMP.

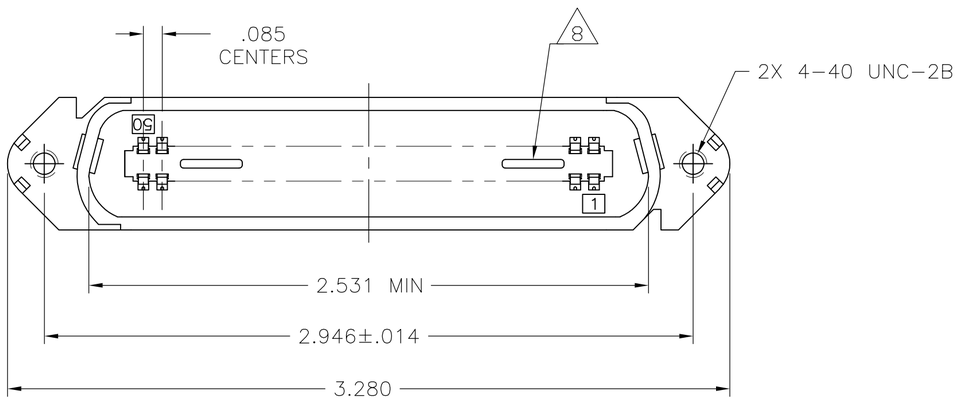

.550 / .500	BLACK	5552382-1
CABLE RANGE	COLOR	PART NUMBER

THIS DRAWING IS A CONTROLLED DOCUMENT.

DIMENSIONS: INCHES

TOLERANCES UNLESS OTHERWISE SPECIFIED:
0 PLC ± -
1 PLC ± -
2 PLC ± -
3 PLC ± -
4 PLC ± -
ANGLES ± -
6

MATERIAL 2
FINISH 3

DWN B. MCMASTER 30SEP05
CHK W. MILLHIMES 30SEP05
APVD W. MILLHIMES 30SEP05
PRODUCT SPEC —
APPLICATION SPEC —
WEIGHT —

Tyco Electronics
Tyco Electronics Corporation
Harrisburg, PA 17105-3608

NAME
PLUG KIT, 50 POSITION, C-SLOT, SCREW LOCK WITH TAPERED COVER, CHAMP-LOK

SIZE	CAGE CODE	DRAWING NO	RESTRICTED TO
A2	00779	C-5552382	—

CUSTOMER DRAWING | SCALE 2:1 | SHEET 1 OF 1 | REV B

5552382

AMP 1471-9 REV 31MAR2000

Downloaded From Oneyac.com

单击下面可查看定价，库存，交付和生命周期等信息

>>TE Connectivity(泰科)

Downloaded From Oneyac.com