THIS DRAWING IS UNPUBLISHED. RELEASED FOR PUBLICATION – , – .
© COPYRIGHT 2011 By – ALL RIGHTS RESERVED.

LOC	DIST
—	—

REVISIONS

P	LTR	DESCRIPTION	DATE	DWN	APVD
	B	REVISED PER ECO–14–001517	31JAN2014	AP	RP

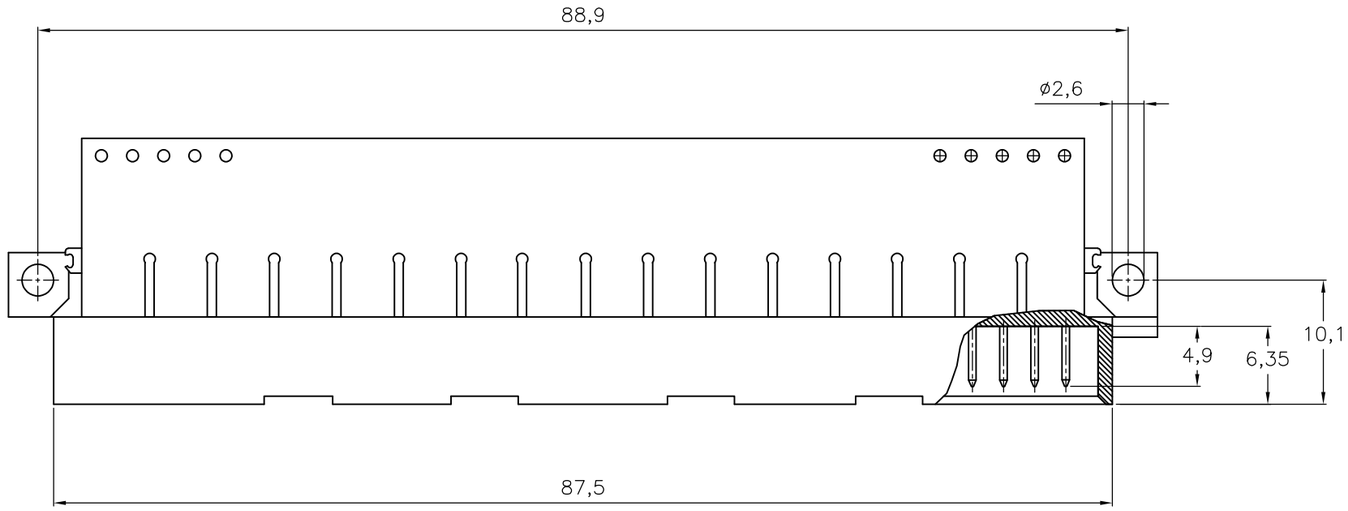

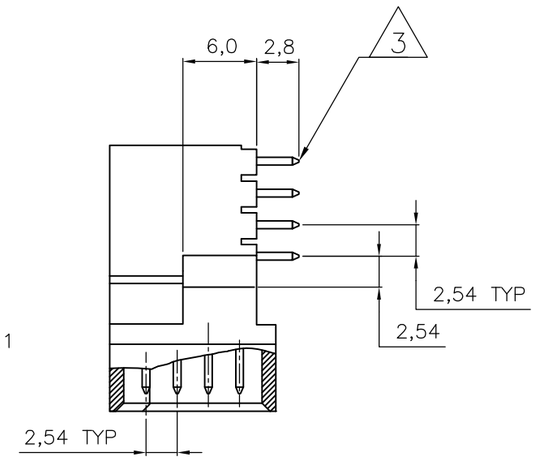

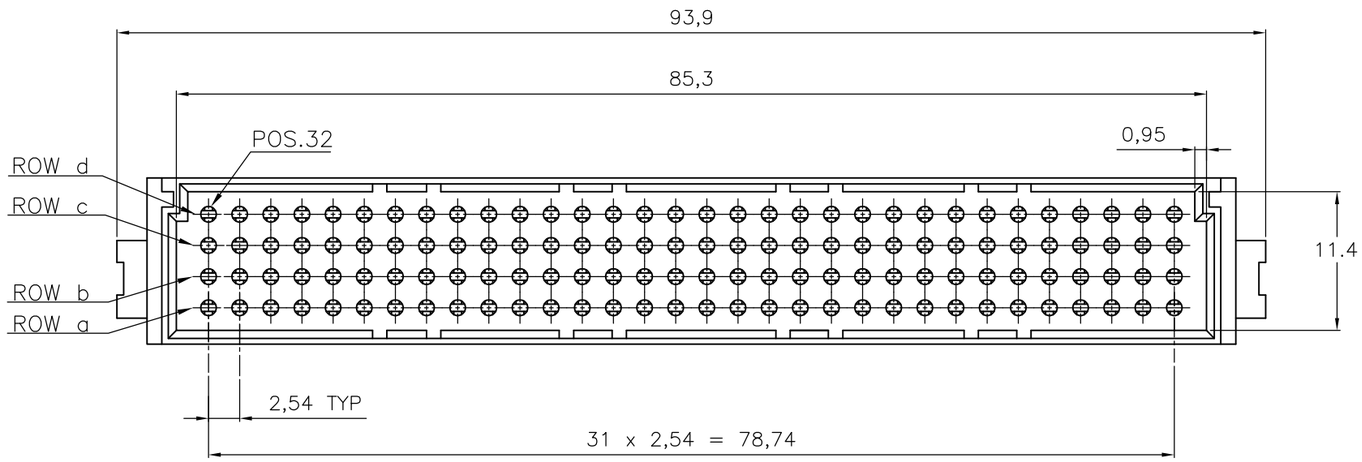

1. MATERIAL:
   – HOUSING: THERMOPL. POLYESTER
   COLOUR : GREY
   – CONTACTS: BRASS

2. PLATING CONTACT:
   PLATING AT INTERFACE TO MEET CLASS II PERFORMANCE CRITERIA OF DIN 41612 SPECIFICATION
   Sn OVER 1.25µm Ni AT PCB INTERFACE

3. SOLDERPOSTS SUITABLE FOR P.C.B HOLES
   0,8 ±0,05 OR 1,0±0,1 DIA.

POS	ROW a	ROW b	ROW c	ROW d
32	X	X	X	X
31	X	X	X	X
30	X	X	X	X
29	X	X	X	X
28	X	X	X	X
27	X	X	X	X
26	X	X	X	X
25	X	X	X	X
24	X	X	X	X
23	X	X	X	X
22	X	X	X	X
21	X	X	X	X
20	X	X	X	X
19	X	X	X	X
18	X	X	X	X
17	X	X	X	X
16	X	X	X	X
15	X	X	X	X
14	X	X	X	X
13	X	X	X	X
12	X	X	X	X
11	X	X	X	X
10	X	X	X	X
9	X	X	X	X
8	X	X	X	X
7	X	X	X	X
6	X	X	X	X
5	X	X	X	X
4	X	X	X	X
3	X	X	X	X
2	X	X	X	X
1	X	X	X	X

AN ASTERISK ,,X'' DENOTES A CONTACT.

SEE NOTE 2	SEE NOTE 1	106739–4
FINISH	MATERIAL	PART NUMBER

THIS DRAWING IS A CONTROLLED DOCUMENT.

DIMENSIONS: mm

TOLERANCES UNLESS OTHERWISE SPECIFIED:
0 PLC ± –
1 PLC ± –
2 PLC ± –
3 PLC ± –
4 PLC ± –
ANGLES ± –

MATERIAL –
FINISH –

DWN R.v.L/Grzybowski 30NOV2011
CHK –
APVD R.FIJTEN 18NOV00
PRODUCT SPEC —
APPLICATION SPEC —
WEIGHT —

TE Connectivity

NAME
128 POSITION C MALE
SOLDER CONNECTOR
–

SIZE	CAGE CODE	DRAWING NO	RESTRICTED TO
A3	00779	C–106739	—

CUSTOMER DRAWING

SCALE	SHEET	REV
NTS	1 OF 1	B

Downloaded From Oneyac.com

单击下面可查看定价，库存，交付和生命周期等信息

>>TE Connectivity(泰科)

Downloaded From Oneyac.com