DRAWING MADE IN THIRD ANGLE PROJECTION

THIS DRAWING IS UNPUBLISHED. RELEASED FOR PUBLICATION ,19 .

© COPYRIGHT 19 BY AMP INCORPORATED. ALL INTERNATIONAL RIGHTS RESERVED.

PROD CODE	LOC	DIST
3321	DF	XO

P	F	ZONE	LTR	DESCRIPTION	DATE	APPD
			B	REV PER 0600-6086-96 CT	11-97	JW

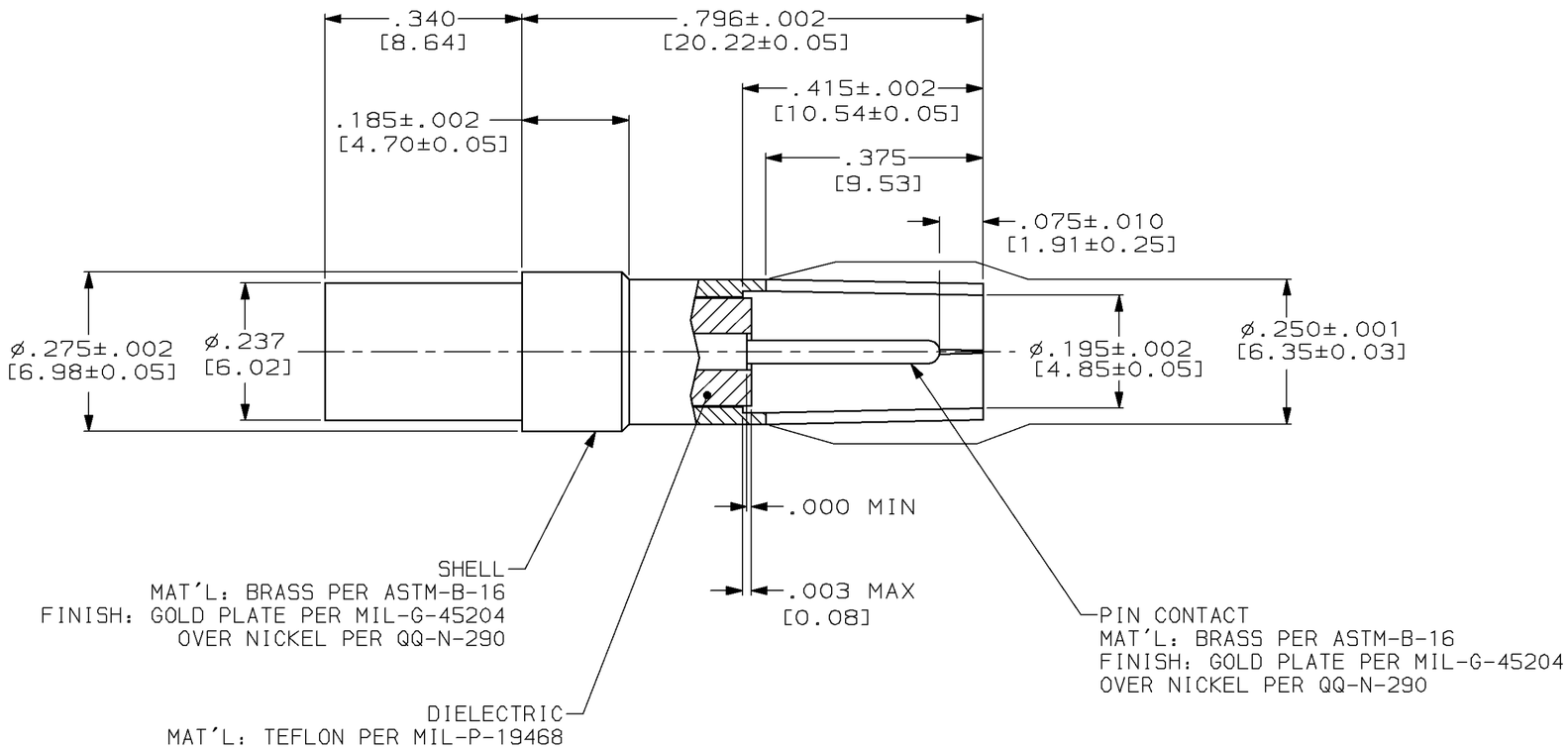

1. FOR USE WITH RG-402,.141 SEMI-RIGID CABLE
2. CABLE CRIMP:USE MILITARY TOOL M22520/5-01, WITH DIE SET M22520/5-11,CAVITY A OR EQUIVALENT
3. CENTER CONTACT CRIMP: USE MILITARY TOOL M22520/2-01, WITH DANIELS POSITIONER K345,SELECTOR SETTING #5

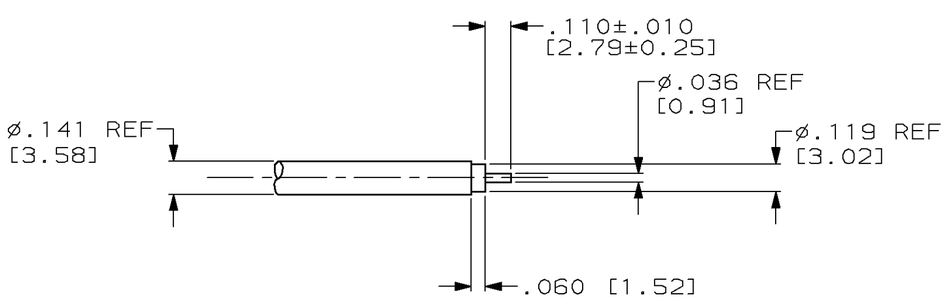

RECOMMENDED STRIP LENGTH
SCALE 2:1

447853

447853-3

PART NO.

DO NOT SCALE PRINT.
UNLESS SPECIFIED
DIMENSIONS IN INCHES [mm]
TOLERANCES ON :
2 PLC DEC ± -
3 PLC DEC ± .005 [0.13]
ANGLES ± -

MATERIAL
-

FINISH
-

DR 7-14-92 C.C.THOMAS
CHK 7-20-92 J.CABARLO
APPD 7-20-92 J.CABARLO
APPD 7-20-92 C.C.THOMAS
PRODUCT SPEC -
APPLICATION SPEC -
WEIGHT -

AMP Incorporated
Harrisburg, PA 17105-3608

NAME
COAXIAL CONTACT, SOCKET, SIZE 9

SIZE	CAGE CODE	DRAWING NO
C	00779	447853
SCALE 5:1		SHEET 1 OF 1

CUSTOMER DRAWING

AMP 1471-6 REV 9-89

16-DEC-96 12:54:08 amp27592 /home/amp27592/edmmod

Downloaded From Oneyac.com

单击下面可查看定价，库存，交付和生命周期等信息

>>TE Connectivity(泰科)

Downloaded From Oneyac.com