THIS DRAWING IS UNPUBLISHED. RELEASED FOR PUBLICATION SEP ,2004.
© COPYRIGHT 2004 By – ALL RIGHTS RESERVED.

LOC	DIST
E	B

REVISIONS

P	LTR	DESCRIPTION	DATE	DWN	APVD
	D1	REVISED PER ECO-11-005033	31MAR11	RK	HMR
	E	REVISED PER ECO-12-002190	03FEB12	TITAN	MARTIN

NOTES

1. 100 TRAY PACK IN ACCORDANCE WITH AMP SPEC 107-3275
2. SINGLE PACK IN ACCORDANCE WITH AMP SPEC 107-3275
3. Au PLATING
4. Ni PLATING
5. FOR TECHNICAL DATA REFER TO YOUR LOCAL TE CONNECTIVITY SALES OFFICE
6. ALL DIMENSIONS ARE NOMINAL FOR REFERENCE ONLY UNLESS OTHERWISE STATED

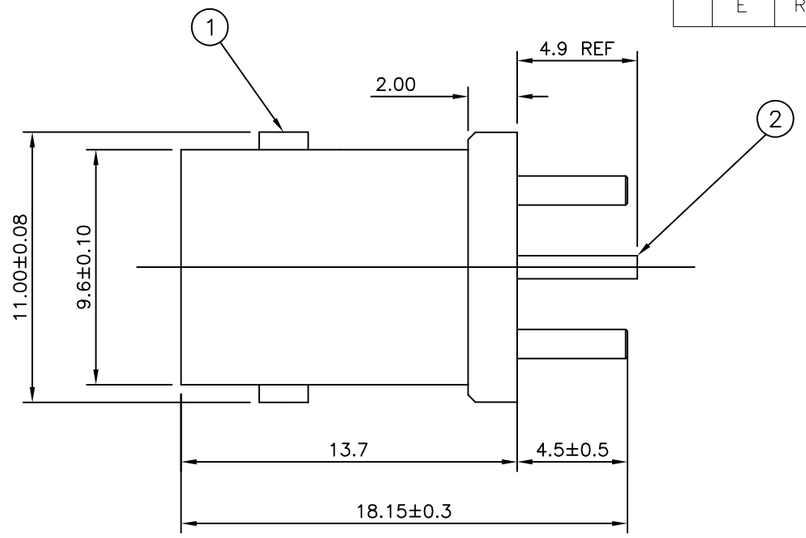

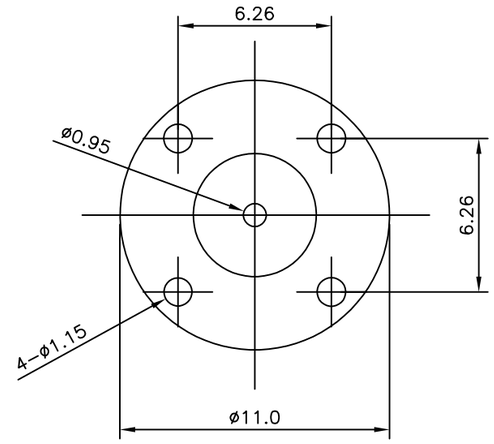

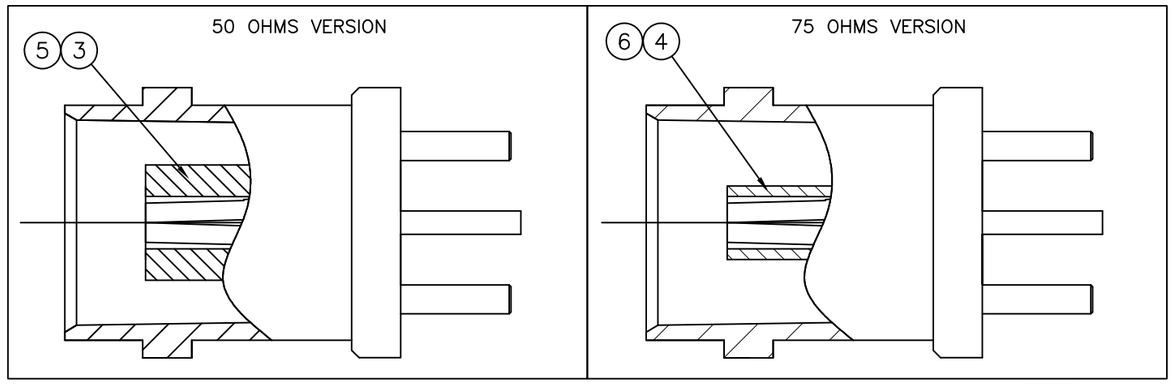

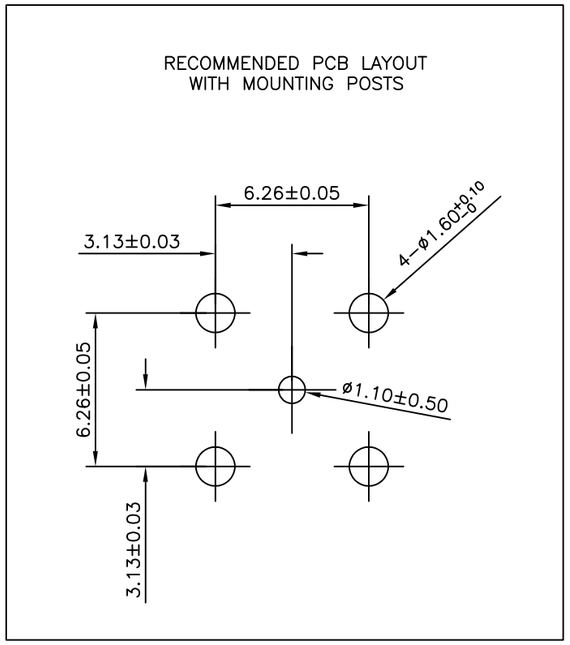

OBSOLETE

QUANTITY PER ASSY								PARTS LIST		
1	1	–	–	–	–	–	–	PTFE	INSULATOR	6
–	–	1	1	–	–	–	–	PTFE	INSULATOR	5
–	–	–	–	1	1	–	–	POLYMETHYLPENTENE	INSULATOR	4
–	–	–	–	–	–	1	1	POLYMETHYLPENTENE	INSULATOR	3
1	1	1	1	1	1	1	1	PHOS BRONZE (3)	CONTACT	2
1	1	1	1	1	1	1	1	ZINC ALLOY (4)	BODY	1
5--7	5--6	5--5	5--4	5--3	5--2	5--1	5--0	MATERIAL	DESCRIPTION	ITEM
(2)	(1)	(2)	(1)	(2)	(1)	(2)	(1)			

THIS DRAWING IS A CONTROLLED DOCUMENT.

DIMENSIONS: mm

TOLERANCES UNLESS OTHERWISE SPECIFIED:
0 PLC ± –
1 PLC ± –
2 PLC ± –
3 PLC ± –
4 PLC ± –
ANGLES ± –

MATERIAL –

FINISH –

DWN RITA ZUO 11 Mar 09
CHK ANSON MA 11 Mar 09
APVD BOB ZHAO 11 Mar 09
PRODUCT SPEC 108-112000
APPLICATION SPEC –
WEIGHT –

TE Connectivity

NAME
BNC STRAIGHT LOW PROFILE PCB SOCKET
–
–

SIZE	CAGE CODE	DRAWING NO	RESTRICTED TO
A3	00779	C-1634503	–

CUSTOMER DRAWING

SCALE	SHEET	REV
NTS	1 OF 1	E

Downloaded From Oneyac.com

单击下面可查看定价，库存，交付和生命周期等信息

>>TE Connectivity(泰科)

Downloaded From Oneyac.com