NUMBER C-5917628

METRIC 三角法 (3rd ANGLE PROJECTION)

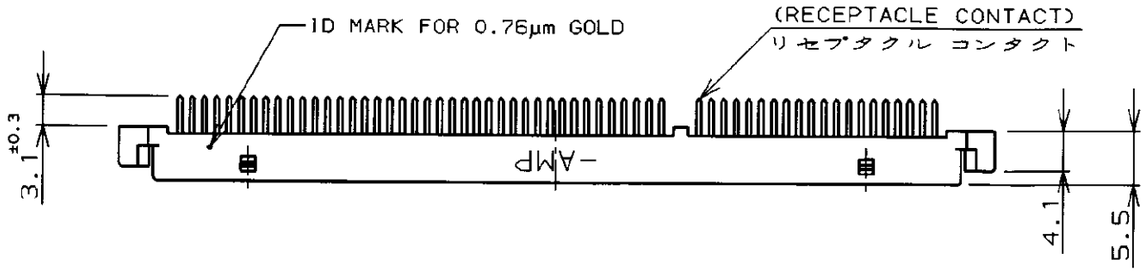

注記：

1. 材料：ハウジング；熱可塑性樹脂 (UL 94V-0) 色：黒
   コンタクト：銅合金
2. 表面仕上げ；
   コンタクト：全面ニッケル下地めっき
   接触部金めっき、脚部すずめっき
3. 本製品はフラックス上がり防止処理済み

NOTE：

1. MATERIAL:HOUSING;THERMOPLASTICS (UL 94V-0) BLACK
   CONTACT:COPPER ALLOY
2. FINISH:CONTACT:Au AT CONTACT AREA
   TIN AT TINE, OVER Ni
3. THESE PRODUCTS WERE COATED BY ANTI-FLUX MIGRATION AGENT.
4. OBSOLETE

鉛フリー
LEAD FREE

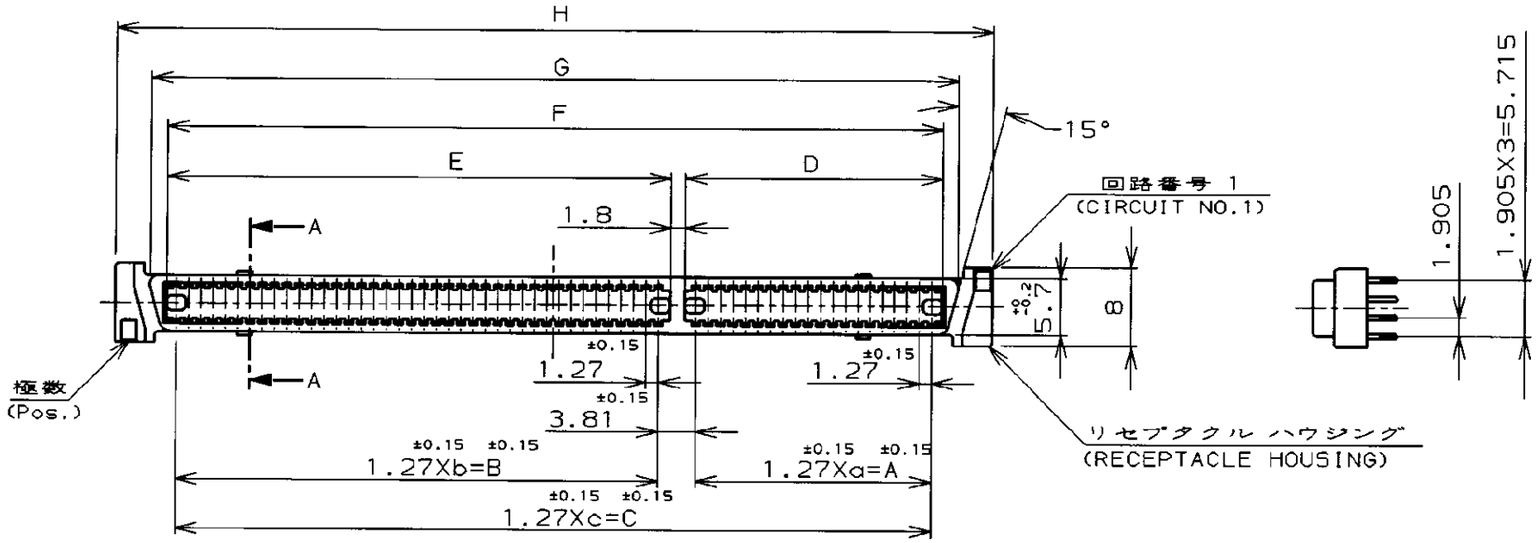

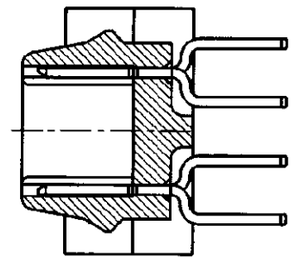

SECT "A"-"A"

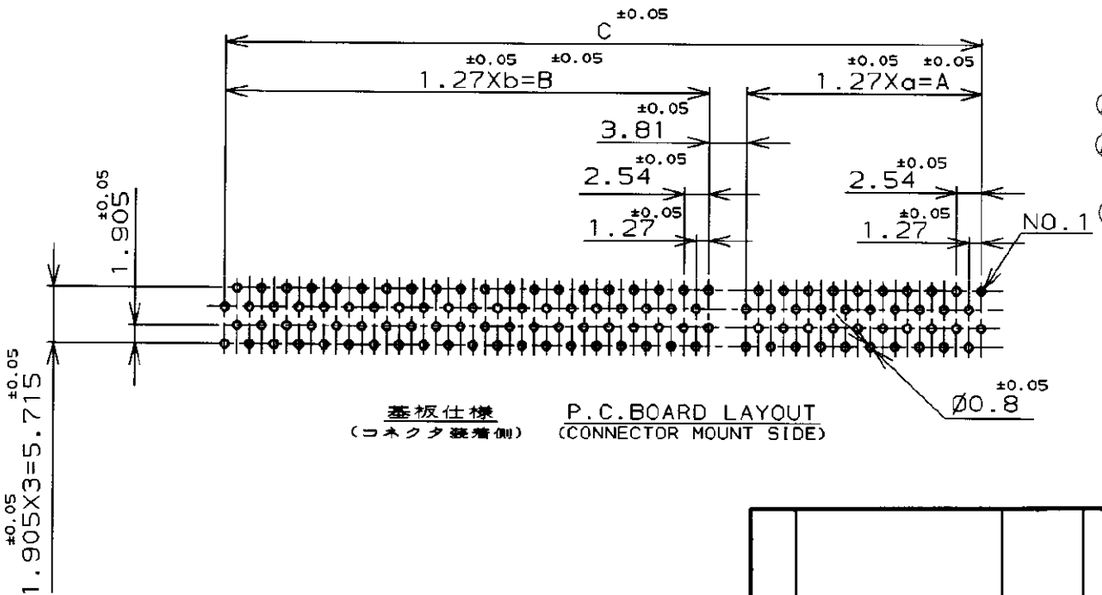

基板仕様 (コネクタ装着側) P.C.BOARD LAYOUT (CONNECTOR MOUNT SIDE)

	a	A	b	B	c	C	D	E	F	G	H	THK OF GOLD	Pos.	P/N
Ⓐ4	~~29~~	~~36.83~~	~~49~~	~~62.23~~	~~〃~~	~~102.87~~	~~38.83~~	~~64.23~~	~~104.87~~	~~107.96~~	~~115.48~~	~~0.76μm~~	~~160~~	~~2~~ ~~7~~
Ⓐ4	~~〃~~	~~〃~~	~~〃~~	~~〃~~	~~39~~	~~49.53~~	~~〃~~	~~〃~~	~~51.53~~	~~54.62~~	~~62.15~~	~~0.76μm~~	~~80~~	~~2~~ ~~3~~
4	39	49.53	49	62.23	〃	115.57	51.53	64.23	117.57	120.68	128.19	0.3μm	180	-8
Ⓐ4	~~29~~	~~36.83~~	~~49~~	~~62.23~~	~~〃~~	~~102.87~~	~~38.83~~	~~64.23~~	~~104.87~~	~~107.96~~	~~115.48~~	~~0.3μm~~	~~160~~	~~-7~~
4	29	36.83	39	49.53	〃	90.17	38.83	51.53	92.17	95.26	102.79	0.3μm	140	-6
	19	24.13	39	49.53	〃	77.47	26.13	51.53	79.47	82.56	90.09	0.3μm	120	-5
	〃	〃	〃	〃	49	62.23	〃	〃	64.23	67.32	74.85	0.3μm	100	-4
	〃	〃	〃	〃	39	49.53	〃	〃	51.53	54.62	62.15	0.3μm	80	-3
	〃	〃	〃	〃	29	36.83	〃	〃	38.83	41.92	49.45	0.3μm	60	-2
	〃	〃	〃	〃	19	24.13	〃	〃	26.13	29.22	36.75	0.3μm	40	5917628-1

LTR	DESCRIPTION	DATE	DWN	APVD
B	ECO-20-000700	JUN102020		
A	REVISED PER ECR-12-013341	28MAR2013	K.M	E.T
O	RELEASED (FJB0-0582-04)	08JUN04	T.K	I.E

TE Connectivity

相合電線断面積 (WIRE RANGE) mm² (AWG -)	被覆外径 (INSULATION DIA.) mmø
材料 (MATERIAL) 1	仕上 (FINISH) 2
CHK. I.ENOMOTO 09JUN04	DE. T.KAWAMAE 09JUN04 / APP. I.ENOMOTO 09JUN04

名称 (NAME): AMP FH CONNECTOR RECEPTACLE (VERTICAL) FOR 8mm STACKING

一般公差 (GENERAL TOLERANCE): 10以下 ±0.2; 10を超え30以下 ±0.25; 30を超え100以下 ±0.3; 角度 ±3°

B | LOC J | 番号 (No.) C-5917628

尺度 (SCALE) NTS | REV. B | SHEET 1 OF 1

(CUSTOMER DRAWING) 参考図面

単位：mm DIMENSIONS IN MM. DO NOT SCALE PRINT

PRINT DIST

AMP-J010-2C REV.3/'93

Downloaded From Oneyac.com

单击下面可查看定价，库存，交付和生命周期等信息

>>TE Connectivity(泰科)

Downloaded From Oneyac.com