THIS DRAWING IS UNPUBLISHED. RELEASED FOR PUBLICATION -,N/A.
© COPYRIGHT N/A BY TYCO ELECTRONICS CORPORATION. ALL RIGHTS RESERVED.

LOC	DIST
DF	SO

REVISIONS

P	LTR	DESCRIPTION	DATE	DWN	APVD
	U	REV PER ECO-05-002582	06-05	AA	DE

PART NO.	A	B	C	REMARKS	
849616-1	96.00 [2438.4]	–	–		OBSOLETE
849616-2	72.00 [1828.8]	–	–		OBSOLETE
849616-3	348.00 [8839.2]	6.00 [152.4]	–		OBSOLETE
849616-4	246.00 [6248.4]	6.00 [152.4]	–		OBSOLETE
849616-5	360.00 [9144.0]	6.00 [152.4]	–		OBSOLETE
849616-6	300.00 [7620.0]	8.00 [203.2]	8.00 [203.2]		OBSOLETE
849616-7	12.00 [304.8]	6.00 [152.4]	–	5	
849616-8	120.00 [3048.0]	8.00 [203.2]	8.00 [203.2]		OBSOLETE
849616-9	144.00 [3657.6]	8.00 [203.2]	8.00 [203.2]		OBSOLETE
1-849616-0	36.00 [914.4]	8.00 [203.2]	8.00 [203.2]		
1-849616-1	96.00 [2438.4]	8.00 [203.2]	8.00 [203.2]		OBSOLETE
1-849616-2	96.00 [2438.4]	–	–		OBSOLETE
1-849616-3	72.00 [1828.8]	12.00 [304.8]	12.00 [304.8]		OBSOLETE
1-849616-4	180.00 [4572.0]	8.00 [203.2]	8.00 [203.2]		OBSOLETE
1-849616-5	18.00 [457.2]	12.00 [304.8]	12.00 [304.8]		OBSOLETE
1-849616-6	8.50 [215.9]	12.00 [304.8]	12.00 [304.8]		OBSOLETE
1-849616-7	1440.00 [36576.0]	12.00 [304.8]	12.00 [304.8]		OBSOLETE
1-849616-8	720.00 [18288.0]	12.00 [304.8]	12.00 [304.8]		OBSOLETE
1-849616-9	900.00 [22860.0]	12.00 [304.8]	12.00 [304.8]		OBSOLETE
2-849616-0	1080.00 [27432.0]	12.00 [304.8]	12.00 [304.8]		OBSOLETE
2-849616-1	30.00 [762.0]	12.00 [304.8]	12.00 [304.8]		OBSOLETE
2-849616-2	60.00 [1524.0]	12.00 [304.8]	12.00 [304.8]	5	
2-849616-3	128.00 [3251.2]	12.00 [304.8]	12.00 [304.8]	5	
2-849616-4	134.00 [3403.6]	12.00 [304.8]	12.00 [304.8]		OBSOLETE
2-849616-5	132.00 [3352.8]	12.00 [304.8]	12.00 [304.8]		OBSOLETE
2-849616-6	120.00 [3048.0]	12.00 [304.8]	12.00 [304.8]		OBSOLETE
2-849616-7	101.00 [2565.4]	12.00 [304.8]	12.00 [304.8]		OBSOLETE
2-849616-8	150.00 [3810.0]	12.00 [304.8]	12.00 [304.8]		OBSOLETE
2-849616-9	20.00 [508.0]	8.00 [203.2]	–		OBSOLETE
3-849616-0	24.00 [609.6]	6.00 [152.4]	6.00 [152.4]	5	
7-849616-2	60.00 [1524.0]	12.00 [304.8]	12.00 [304.8]	6	

1. TOLERANCE OF LEAD LENGTH:
   UP TO 24 INCHES [609.6] = ±.12 [3.0]
   24 INCHES [609.6] & UP = 1%
2. MARKED PER MIL-STD-130.
3. TO MATE WITH AMP LGH-1L RECEPTACLE WITH 1.69 [42.9] BARREL DEPTH.
4. OPERATING VOLTAGE: 25 KVDC AT 0 TO 70,000 FEET, -55°C TO 125°C.
5. PIGTAIL SOLDER DIPPED.
6. INSULATION CUT TO LENGTH, BUT NOT REMOVED.

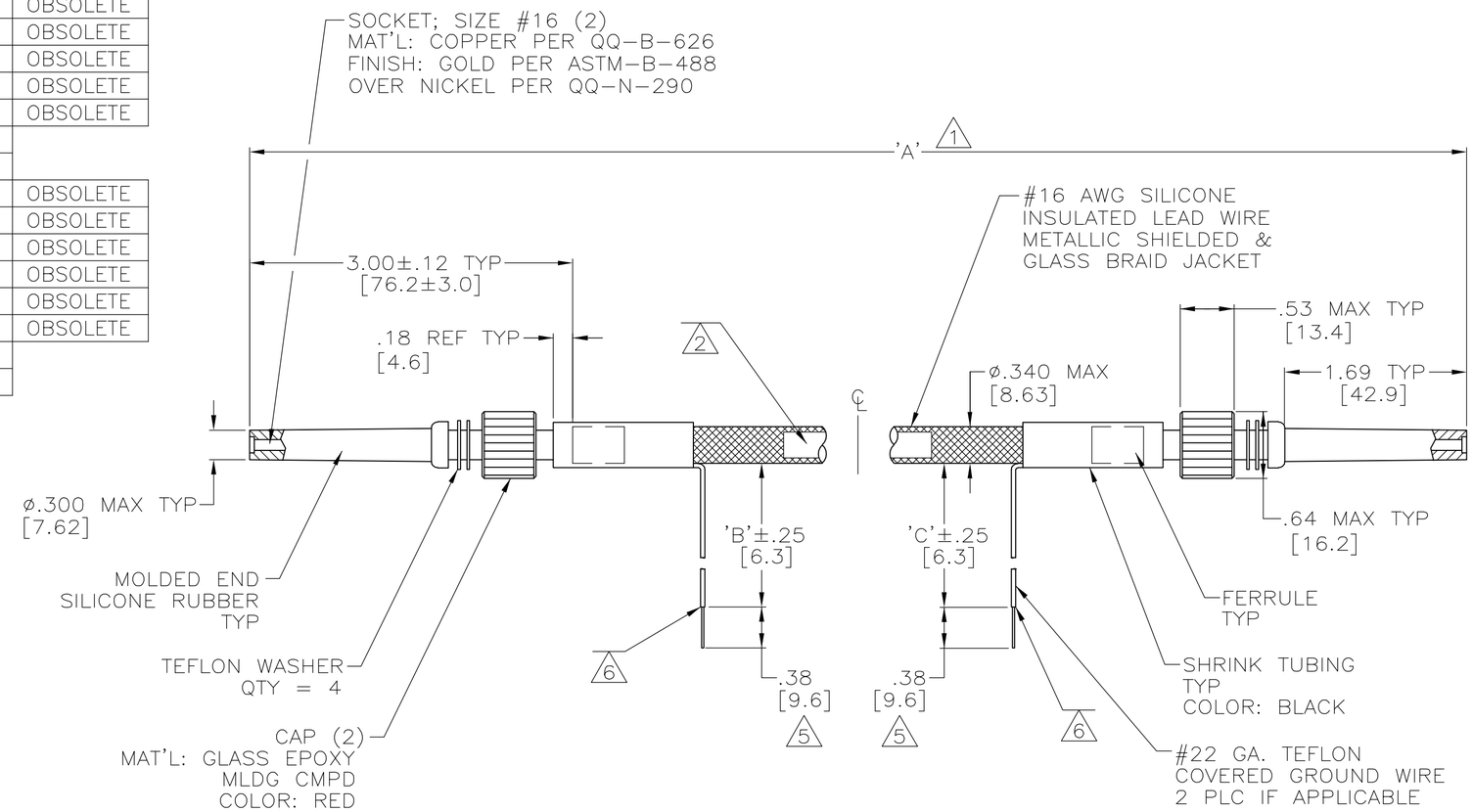

849616

THIS DRAWING IS A CONTROLLED DOCUMENT.

DIMENSIONS: INCHES

TOLERANCES UNLESS OTHERWISE SPECIFIED:

0 PLC	± –
1 PLC	± –
2 PLC	± .02 [0.5]
3 PLC	± –
4 PLC	± –
ANGLES	± –

MATERIAL: SEE CALLOUTS

FINISH: SEE CALLOUTS

DWN	C.C.THOMAS	25-MAR-90
CHK	D. EABY	28-MAR-90
APVD	D. EABY	28-MAR-90
PRODUCT SPEC	—	
APPLICATION SPEC	—	
WEIGHT	—	

CUSTOMER DRAWING

tyco Electronics

Tyco Electronics Corporation
Harrisburg, Pa 17105-3608

NAME: LEAD ASSEMBLY
DBL END, LGH-1L
SHIELDED & GLASS BRAID

SIZE	CAGE CODE	DRAWING NO	RESTRICTED TO
A2	00779	C-849616	—

SCALE 1:1 | SHEET 1 OF 1 | REV U

AMP 1471-9 REV 31MAR2000

Downloaded From Oneyac.com

单击下面可查看定价，库存，交付和生命周期等信息

>>TE Connectivity(泰科)

Downloaded From Oneyac.com