THIS DRAWING IS UNPUBLISHED. RELEASED FOR PUBLICATION 19
© COPYRIGHT 20 BY TYCO ELECTRONICS CORPORATION. ALL RIGHTS RESERVED.

LOC	DIST
AD	00

REVISIONS

P	LTR	DESCRIPTION	DATE	DWN	APVD
	O	REV PER EC 0S12-0235-04	01OCT2004	BC	RW
	A	REV PER ECO-06-025515	22JAN2007	BC	DB
	B	REVISED PER ECO-08-008615	10JUL2008	DH	DB
	B1	REV PER ECO-09-018291	25AUG2009	AEG	DD

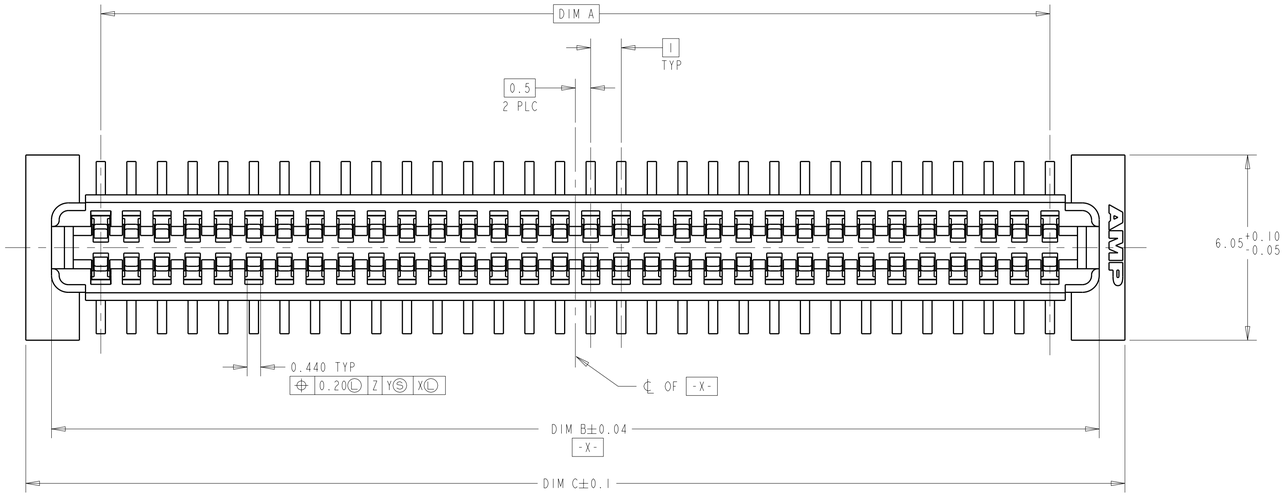

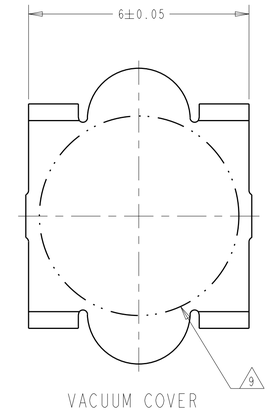

VACUUM COVER

1. HOUSING MATERIAL: HIGH TEMPERATURE THERMOPLASTIC, COLOR: BLACK. CONTACT MATERIAL: PHOSPHOR BRONZE.
2. CONTACT FINISH: NICKEL UNDERPLATE ALL OVER, MATING SURFACES PLATED TO MEET PLI PERFORMANCE REQUIREMENTS OF INDUSTRY SPECIFICATION EIA-700AAAB, SOLDER TAILS PLATED TIN.
3. DATUM LOCATIONS AND BASIC DIMENSIONS TO BE ESTABLISHED BY THE CUSTOMER. CONSULT AMP ENGINEERING WHEN PLACING MULTIPLE CONNECTORS ON A PC BOARD.
4. PACKAGED IN TAPE ON REEL PER EIA-481.
5. 1.4±0.05 DIAMETER HOLE WHEN PLACING BY HAND.
6. SHORTER SOLDER LANDS MAY BE USED PER EIA 700AAAB, HOWEVER 2.4 LENGTH ASSURES OPTIMUM SOLDER FILLET REGARDLESS OF MANUFACTURER OF CONNECTOR.
7. REFERRED TO AS DIM H = 5.30±0.1 IN EIA 700AAAB SPECIFICATION.
8. VACUUM COVER NOT SHOWN IN SOME VIEWS FOR CLARITY.
9. 5.5 MIN DIAMETER TARGET AREA FOR VACUUM PICK-UP.
10. CONTACT FINISH: 0.00381 MINIMUM MATTE TIN PER ASTM B 545 ON SOLDER AREA. 0.00127 MINIMUM GOLD PER ASTM B 488 ON MATING AREA. BOTH OVER 0.00127 MINIMUM NICKEL PER SAE-AMS-QQ-N-290 ON ENTIRE CONTACT.
11. SQUARE AND DIAMOND SHAPED POSTS
12. ROUND SHAPED POSTS

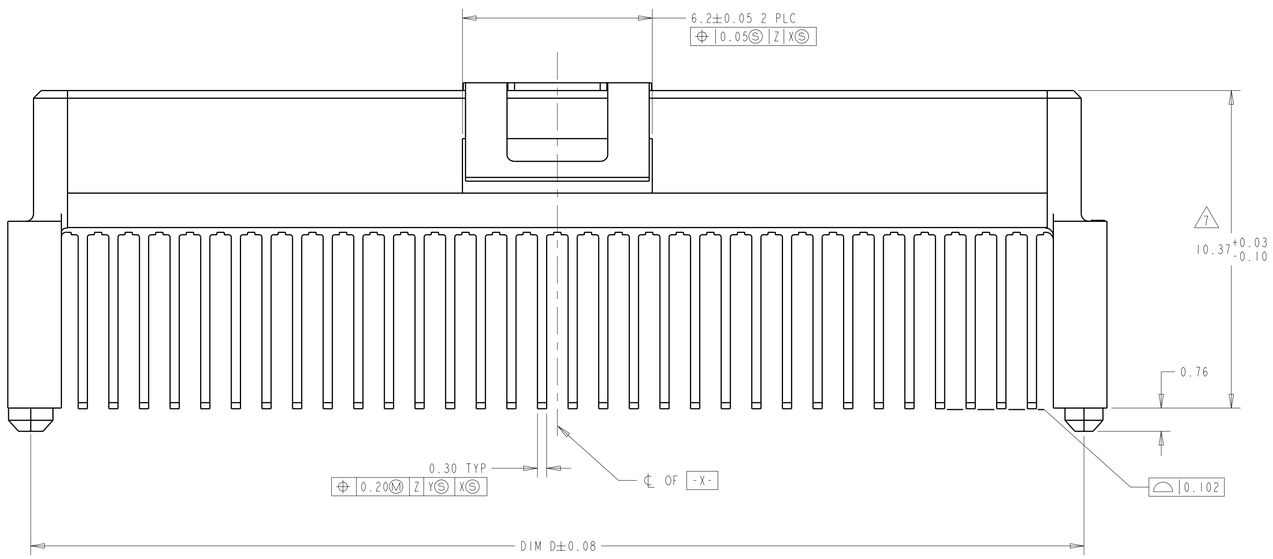

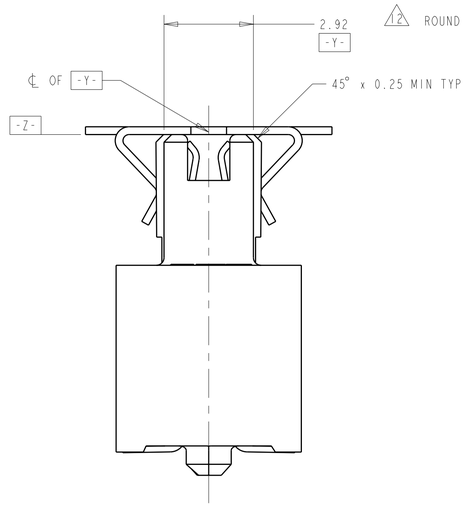

11 STYLE A POSTS

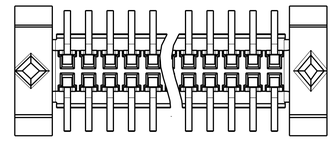

12 STYLE B POSTS

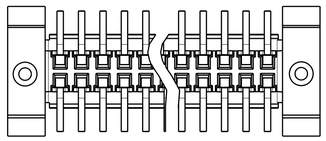

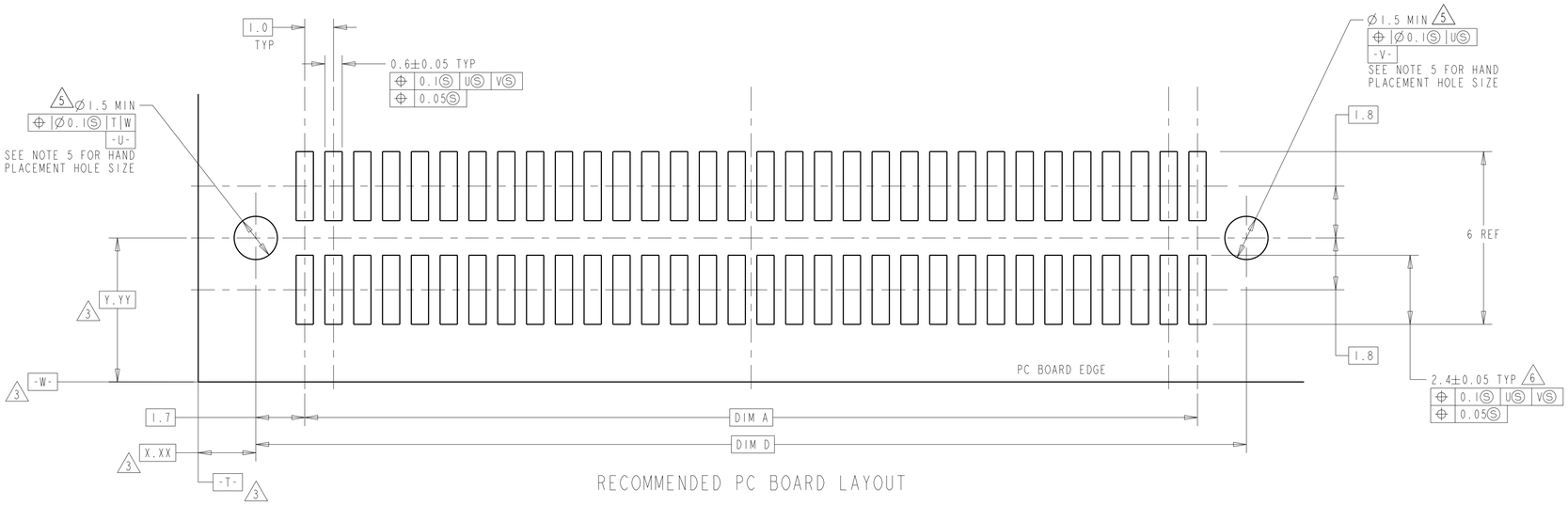

RECOMMENDED PC BOARD LAYOUT

POST STYLE	FINISH	DIM D	DIM C	DIM B	DIM A	STACK HEIGHTS	POS	PART NUMBER
12	10	44.4	44.4	44.22	41	14,15	84	3-5146896-2
12	10	34.4	35.9	34.22	31	14,15	64	3-5146896-1
12	2	44.4	44.4	44.22	41	14,15	84	2-5146896-2
12	2	34.4	35.9	34.22	31	14,15	64	2-5146896-1
11	10	44.4	45.9	44.22	41	14,15	84	1-5146896-2
11	10	34.4	35.9	34.22	31	14,15	64	1-5146896-1
11	2	44.4	45.9	44.22	41	14,15	84	5146896-2
11	2	34.4	35.9	34.22	31	14,15	64	5146896-1

THIS DRAWING IS A CONTROLLED DOCUMENT FOR TYCO ELECTRONICS CORPORATION. IT IS SUBJECT TO CHANGE AND THE CONTROLLING ENGINEERING ORGANIZATION SHOULD BE CONTACTED FOR THE LATEST REVISION.

DIMENSIONS: mm

TOLERANCES UNLESS OTHERWISE SPECIFIED:
0 PLC ±-
1 PLC ±-
2 PLC ±0.03
3 PLC ±0.003
4 PLC ±-
ANGLES 40° 30'
FINISH -
SEE TABLE

MATERIAL 1

DWN	B.CARBO	01OCT04
CHK	R.WERTZ	01OCT04
APVD	R.WERTZ	01OCT04

PRODUCT SPEC 502-1079
APPLICATION SPEC 114-25045
WEIGHT -

Tyco Electronics
Tyco Electronics Corporation
Harrisburg, PA 17105-3608

NAME RECEPTACLE ASSY, W/ VACUUM COVER, 1.0mm FH(IEEE 1386) CONNECTOR

SIZE	CAGE CODE	DRAWING NO	RESTRICTED TO
A1	00779	C-5146896	-

CUSTOMER DRAWING
SCALE 10:1 SHEET 1 OF 1 REV B1

AMP 4805 REV 31MAR2000

Downloaded From Oneyac.com

Pro/ENGINEER DRAWING

单击下面可查看定价，库存，交付和生命周期等信息

>>TE Connectivity(泰科)

Downloaded From Oneyac.com